Village of Western Springs, Illinois

Ridgewood Subdivision Infrastructure Study

Prepared by:

BAXTER & WOODMAN
Consulting Engineers

www.baxterwoodman.com

February 2016

Village of Western Springs, Illinois
Ridgewood Subdivision Infrastructure Study

TABLE OF CONTENTS

Section — Page No.

EXECUTIVE SUMMARY

1. INTRODUCTION

2. WATER SYSTEM

2.1 Evaluation of Existing Infrastructure 9
2.1.1 Water System Evaluation 9
2.1.2 Water Main Break History 10
2.2 Water Quality 12
2.3 Rehabilitation and Replacement Options 13
2.3.1 Water Main Lining Rehabilitation 13
2.4 Recommendations 14

3. SANITARY SYSTEM

3.1 Existing Conditions 15
3.2 Recommendations 15

4. STORM SYSTEM

4.1 Data Collection and Review 18
4.2 Existing Conditions Analysis 18
4.2.1 Hydrology 18
4.2.2 Hydraulics 20
4.2.3 Results 21
4.3 Flooding Problem Areas 21
4.3.1 Area 1: Ridgewood Drive 22
4.3.2 Area 2: Heritage Estates Detention Basin Overflow 22
4.3.3 Area 3: Birch Lane 24
4.3.4 Area 4: Longmeadow Lane Cul-De-Sac 25
4.4 Drainage Improvement Evaluation 25
4.4.1 Ridgewood Drive: Alternates 1A and 1B 25
4.4.2 Heritage Estates Detention Basin: Alternate 1 26
4.4.3 Heritage Estates Detention Basin Overflow: Alternates 2A and 2B 27
4.4.4 Birch Lane 28
4.4.5 Combination 28
4.5 Summary of Results 29
4.6 Conclusions 30
4.7 Recommendations 30
4.7.1 Other Recommendations 31

Section Page No.

4.7.2 Phasing Approach 36

5. PAVEMENT, SIDEWALKS AND LIGHTING

5.1 Existing Pavement Conditions 37
5.2 Proposed Roadway Improvements 38
5.2.1 Preliminary Sidewalk Design 38
5.2.2 Street Lighting Plans 39
5.2.3 Intersection Improvements 39

6. NEXT STEPS

6.1 Water 40
6.2 Storm Sewer/Sanitary 40
6.3 Roadway 41

LIST OF TABLES

Table Page No.

1 Pipe Improvements and Associated Costs 13

2 XP-SWMM Model Results - 10-Year 29

3 XP-SWMM Model Results - 100-Year, 10-Year Tailwater 30

LIST OF FIGURES

Figure Page No.

1 Water Main Breaks 10

2 Tributary Drainage Area Map 19

3 XP-SWMM Model Schematic 20

4 Ridgewood Drive, South of Maple Lane 22

5 Flood Waters Flowing South Along Grand Avenue, June 2015 23

6 Heritage Estates Detention Basin Overflow Structure 24

7 Birch Lane, West of Woodland Drive 24

Figure Page No.

8 Existing Storm Sewer Outfall West of Ridgewood Drive and Longmeadow Lane 32

9 Existing Storm Sewer Outfall West of Ridgewood Drive and Crest Lane 33

10 Typical I/I Sources 33

11 Smoke Testing Concept 34

12 Dyed Water Inflow 35

13 PASER Rating Table 37

LIST OF APPENDICES

Appendix

A Water Cost Estimate

B Sanitary Sewer Evaluation Summary of Results

C Stormwater Cost Estimate

D Utility Service Group Report Results

LIST OF EXHIBITS

Exhibit

1 Ridgewood Drive Study - Alternate 1A

2 Ridgewood Drive Study - Alternate 1B

3 Heritage Estates Detention Basin Overflow - Alternate 1

4 Heritage Estates Detention Basin Overflow - Alternate 2A

5 Heritage Estates Detention Basin Overflow: - Alternate 2B

6 Birch Lane

6a Combination

7 Full Depth HMA Removal and Replacement

8 HMA Pavement Reconstruction

Exhibit

9 Concrete Pavement Reconstruction

10 Pavement Summary

11 Preliminary Sidewalk Layout

12 Preliminary Street Lighting Layout

13 Sanitary Sewer Televising Program

EXECUTIVE SUMMARY

The Village of Western Springs Ridgewood Subdivision was developed in the mid-1950s. The Village is experiencing the effects of aging infrastructure, in particular, water main breaks. In addition, the area experiences some significant flooding during stormwater events. This study evaluates the conditions in the neighborhood and provides a long term plan to effectively and efficiently maintain, upgrade and operate the water, sanitary, storm and roadway infrastructure.

Water

Water main breaks and water quality concerns exist in the Ridgewood Subdivision. The Village's water model was used to evaluate the water system in the Ridgewood Subdivision. Water pressures are above the Illinois Environmental Protection Agency (IEPA) minimum; however, the available fire flow is estimated to range between 300 gpm and 1,300 gpm. In many areas, the available fire flow is less than the 1,000 gpm recommended by the Insurance Services Organization (ISO). Pipe rehabilitation or replacement strategies should be considered for long term water system improvements in the neighborhood. In addition, the Village should consider the addition of a hydrant flushing station for a near term improvement of water quality.

Sanitary

The Village recently hired a contractor to clean and televise the sanitary sewers within the Ridgewood Subdivision. An initial review of the closed-circuit television inspections (CCTV) were performed by Village Staff. That review flagged nine sewer segments that require repair. Baxter & Woodman, Inc. was asked to review the inspection videos and provide recommendation for repair of these segments.

All of the nine sanitary sewer segments reviewed require repair. Of the nine sewer segments reviewed, one is in need of immediate attention. The sewer segment on Lawn Drive from Manhole 581 to Manhole 582 is close to a full collapse. Approximately ten feet should be excavated and repaired as soon as possible. The other eight sewer segments require various degrees of repair, and should be repaired within the next year.

Stormwater

Approximately 338 acres are tributary to the Ridgewood Subdivision's storm sewer system, including 188 acres located east of Wolf Road. Analysis of the existing storm sewer system indicated that flooding will occur at several locations for storm events as small as the 2-year storm. The most severe flooding occurs at Ridgewood Drive depression and along the overland flood route carrying flow through the fire station parking lot and west to Flag Creek. These findings are consistent with flooding reports and observations, including reports of significant flooding in August of 2014. B&W recommends upsizing the Flag Creek storm sewer outfalls west of Ridgewood Drive at Longmeadow Lane and Maple Lane, and adding inlet capacity within the roadway. B&W also recommends construction of a relief sewer from the Heritage Estates detention basin to Flag Creek to convey 100-

year flows within the storm sewer system. Additionally, failing storm sewer outfalls at Flag Creek should be reconstructed and small scale improvements at minor flooding areas throughout the subdivision should be considered. Downstream impacts to Flag Creek should be evaluated in detail prior to implementing any stormwater improvement projects recommended in this study.

Pavement

The primary goal of successful pavement management is to rehabilitate streets on a schedule that targets streets just before their condition rapidly declines and becomes far more expensive. The existing streets in the Ridgewood Subdivision are in a deteriorated condition with Pavement Surface Evaluation and Rating (PASER) ratings between 3 and 4 (see Figure 13). The recommended rehabilitation strategy for streets in this condition is full-depth hot-mix asphalt removal and replacement. Delaying pavement rehabilitation of pavements in this condition could result in rapid deterioration and the need for much costlier reconstruction.

1. INTRODUCTION

Ridgewood Subdivision, located in the Village of Western Springs, was developed in the mid-1950s and the infrastructure is aging. Baxter & Woodman, Inc. (B&W) was retained by the Village in January of 2015 to evaluate the entire subdivision's infrastructure system and prepare a complete infrastructure plan. This study provides a long term plan to effectively and efficiently maintain, upgrade and operate the water, sanitary, storm and roadway infrastructure.

2. WATER SYSTEM

The Ridgewood Subdivision is located near the southern extents of the Village and contains a network of 6-inch and 8-inch water mains to provide fire suppression and domestic water service. Although not the southernmost portion of the Village, it does comprise the southern extents of the Village's water system as the adjoining Timber Trails Subdivision is supplied with Lake Michigan water through the neighboring community of Indian Head Park.

Residents in the Village of Western Springs Ridgewood Subdivision have experienced odor and taste issues with their water. The taste and odor issues began after the Village switched from filtering in a lime softening treatment system to a renovated plant that uses reverse osmosis treatment. When the Village switched to the new treatment process, the calcium created by the lime softening process began to strip away from pipes, exposing old iron that was caked in the pipes from years ago. The iron caused the majority of the taste and odor issues for Ridgewood residents. In addition, the subdivision is the farthest from the Village's water tanks with many dead ends in the cul-de-sacs, which causes an increase in water age.

2.1 Evaluation of Existing Infrastructure

The existing water mains are predominately sand cast ductile iron mains and are still the original water mains installed when the area was developed in the 1960s and '70s. Water main constructed in this era has been notoriously brittle, with mixed age water systems often seeing more breaks within pipes of this age than within pipe 30 to 40 years older.

2.1.1 Water System Evaluation

An un-calibrated WaterGEMS model of the Village's distribution system was used to assess the existing pipe sizes within the development. Water distribution models, such as WaterGEMS, are virtual representations of water systems containing applicable information for pumps, pipes and tanks within the system. They can be used to evaluate water main sizing, potential operational changes, or any number of other revisions. Best practices call for such models to be calibrated using flow test data, where the roughness factors applied to pipes within the model are adjusted so that the model emulates actual field results, to the extent practical. However, the Village's model has not been recently calibrated. Data from past calibrations and from experience with other water systems in the area were used as the basis for the friction factors applied.

Normal expected operating pressures range (psi) from the upper 30s to mid-50s. These pressures are toward the lower end of typical delivery pressures within the region, but are in excess of the IEPA's minimum normal operating pressure of 35 psi. The available fire flow is estimated to range between 300 gpm and 1,300 gpm. In many areas, the available fire flow is less than the 1,000 gpm recommended by the ISO.

2.1.2 Water Main Break History

The Village has experienced an excessive amount of main breaks in the Ridgewood Subdivision area as illustrated by the Xs on the Figure below. The area with the worst occurrence of water main breaks is on Ridgewood Drive, a 6-inch diameter pipe installed in 1962. On average, the Village has experienced 4 main breaks a year in the subdivision. Review of the main break data did not reveal any significant trends though a detailed discussion on possible causes of main breaks is included below for background information. It is likely that this water main is indicative of the poor quality mains that were installed in the Chicagoland region in the early 1960s.

FIGURE 1

Water Main Breaks

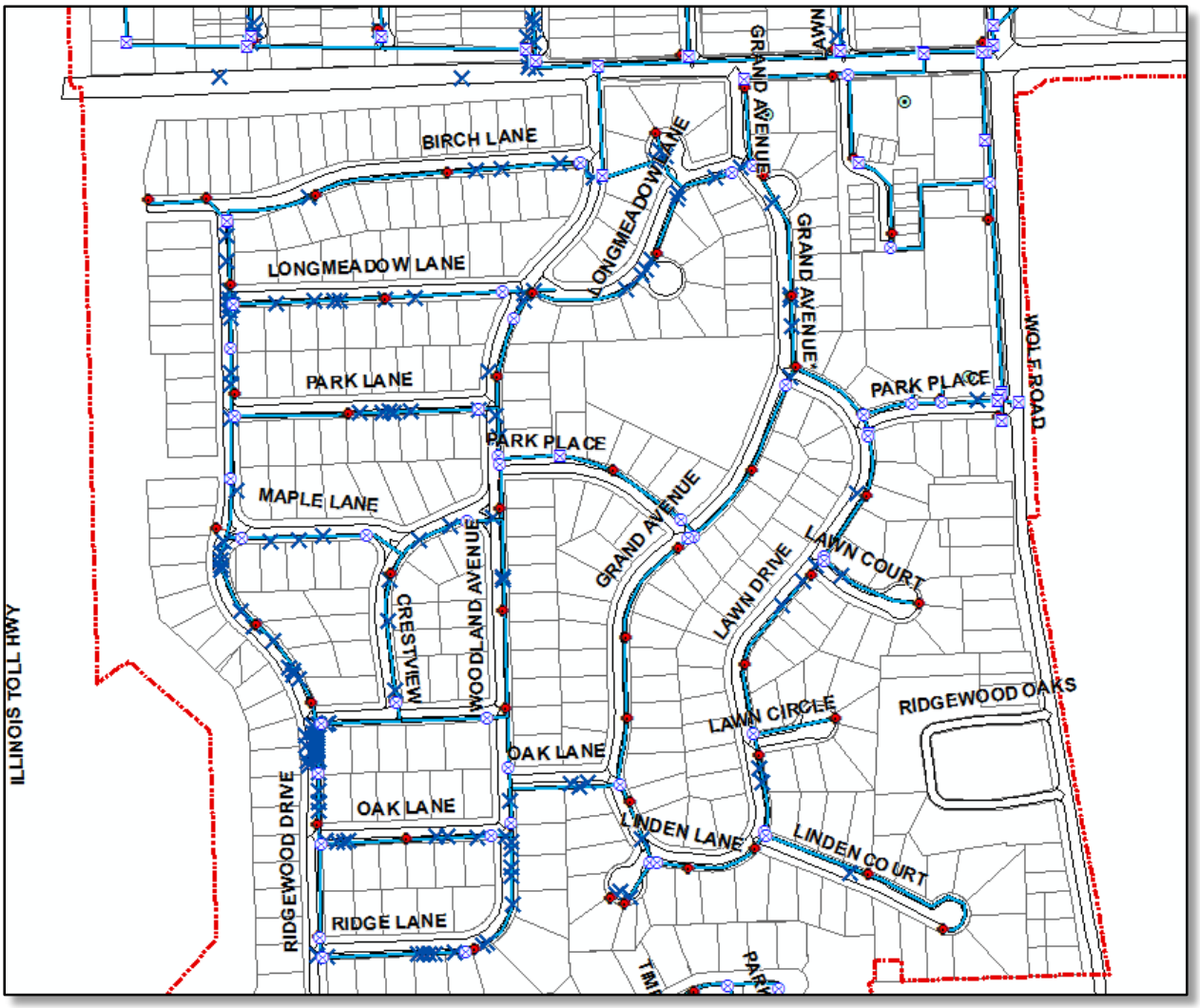

Water main breaks typically fall into one of three categories as outlined in the discussion below:

Main Break Type	Failure Description	Typical Causes of failure	Sample Photos
Blow Out	Hole in pipe with defined shape and area	Isolated point of pressure or corrosion	
Stress/Shear	Circular break around perimeter of the water main	Poor installation, frost heave, inadequate pipe support, water hammer	
Lateral	Elongated main break	Stress caused by inadequate pipe bedding	

Other miscellaneous main break types include "pinhole" leaks caused by point corrosion and pipe joint failures generally caused by improper installation. There are multiple factors that are contributing to all the Ridgewood Subdivision breaks which include the following.

Pipe Age: Age is not necessarily an indicator of anticipated water main breaks, but it can be significant when considered with other factors such as local corrosion rates and the type of pipe material. For example, it has been our experience that ductile iron and spun cast iron pipe manufactured and installed in the late 1960s and early 1970s has a tendency to corrode and fail prematurely in the Chicagoland area while some communities still have cast iron pipes from the 1940s and before in service with lower break frequencies.

Pipe Size: Smaller mains generally exhibit higher failure rates than larger diameter mains. The reasons small diameter mains are more vulnerable are because they have a smaller cross sectional area and have wall thicknesses that are thinner than those of larger pipes. These characteristics make the smaller pipes more vulnerable to beam failure and corrosion.

Soil Type: Some soils create a corrosive environment for cast iron, ductile iron and steel water main pipe. For example, silty clay loam is generally poorly to moderately drained and generally classified as corrosive to metallic pipes.

Pipe Material: Common water main piping materials include cast iron (CI), ductile iron (DI), asbestos cement (also called transite), polyvinyl chloride (PVC), high density polyethylene (HDPE) and prestressed concrete cylinder pipe (PCCP). Varying material characteristics such as wall thickness, corrosion resistance and flexibility all factor into water main breaks.

Temperature: Main break occurrences can be related to temperature. Freezing temperatures penetrate soil and pavement above water mains and create soil and pipe stresses due to expansion and contraction of the soil and pipe material. Drought conditions, such as in the summer of 2012, also lead to main breaks. The soil shrinks as it dries causing ground to pull away from the main, leaving it more susceptible to movement and resulting in increased stress on the water main.

Installation and Location: Water mains installed in heavily traveled areas can be more susceptible to breaks due to increased vibrations and loadings. Water mains located in proximity to construction activities can also be vulnerable due to subsurface disturbances and increased loadings from construction equipment. The installation methods themselves can also contribute to water main breaks. It is theorized that a combination of early application DI pipe produced in the 1960s, in combination with a lack of pipe bedding during the same period, has contributed to premature failure of these pipes.

Water Loss: The actual volume of water lost with a main break is difficult to quantify. A pinhole leak can go undetected for a long period of time and can result in a significant amount of water lost. Pipe diameter and operating pressure and duration until the water main is isolated will dictate the volume of water lost with a large blowout.

2.2 Water Quality

The Village conducted an ice pigging process with Utility Service Group that took place on the week of July 27, 2015. An ice slurry was made by mixing water and salt into a brine solution, and then froze it to 24°. The water main was turned off briefly, and the ice slurry was pumped into a hydrant to get into the pipes. The normal system operating flow and pressure pushed the ice slurry through the pipes from the insertion hydrant to the discharge hydrant – cleaning the pipes along the way as it traveled. Since conducting the ice pigging process, the Village has seen a decrease in iron and turbidity levels but not a significant increase in chlorine residual. The Village has received the first draft of the report from Utility Service Group regarding the water quality observed during the ice pigging process. Results quantify the pounds of sediment removed with the ice pigging process and are included in Appendix D. We recommend further investigation and possible installation of an automatic hydrant flushing station in this area to help promote fresh water.

2.3 Rehabilitation and Replacement Options

The water model results indicate that the existing pipe diameters within the subdivision do not need to be increased for significant fire flow improvements. However, due to the number of water main breaks that are experienced and the reduced fire flow due to higher friction within older CI water mains, the Village should begin a program to rehabilitate or replace the existing water mains. A more detailed discussion of potential replacement and repair options is presented below.

Replacement and rehabilitation methodologies considered include: pipe bursting; horizontal directional drilling; cement lining of iron pipes; and cured-in-place liners. Associated costs with water main improvement options are shown in the table below. The rehabilitation options are compared to an estimated standard cost for open cut replacement of an 8-inch diameter water main versus typical range of costs for various pipe rehabilitation or in-situ replacement techniques. It is important to keep in mind that every water main replacement or rehabilitation is site specific and the cost should be calculated on the known conditions; however, this table provides a frame of reference for the costs variations.

TABLE 1

Pipe Improvements and Associated Costs

Pipe Improvement Construction Methods	Cost Multiplier Range		Cost Per Foot Example ($/ft)*	
	Low	High	Low	High
Open-cut replacement (8-inch in pavement)	1.0		$250	
Open-cut replacement (No surface restoration)	0.9		$225	
Pipe bursting	0.8	1.6	$200	$400
Horizontal directional drilling	0.7	1.3	$175	$325
Cement lining of iron pipes	0.6	0.9	$150	$225
Cured-in-place liners	0.6	0.8	$150	$200

**Cost are from bidding results from typical infrastructure projects in the Chicagoland area.*

2.3.1 Water Main Lining Rehabilitation

Cured-in-place pipe lining (CIPP) of water mains is an IEPA approved trenchless pipe rehabilitation process completed by installing a structural liner within a deteriorated host pipe. Water Main CIPP is similar to sanitary sewer CIPP, which has been used regularly over the past 35 years. In the past 5 years, CIPP for water mains became more prevalent. CIPP lining can be a cost effective solution for water mains varying in size from 4" to 20" diameter. Water services are reinstated from inside of the pipe. The final liner is a Class IV fully structural liner which will last 50 years after the host pipe fails. The benefits of water main lining over full replacement include reduced construction cost, minimized

disruption during construction, water service maintained throughout construction and shortened project completion times.

Based on review of the available pipe rehabilitation and in-situ replacement techniques such as cured in place water main liners and the condition of the existing pipes, it is our opinion that there will be some instances that pipe rehabilitation or in-situ replacement may be more cost effective and practical than traditional open-cut construction.

2.4 Recommendations

Offsite water main improvements are necessary to improve the available fire flow within the Ridgewood Subdivision. The limited main capacity between the northern part of the subdivision and the Village's water treatment plant and elevated tank contributes to the currently limited fire flow within the development. These restrictions, along with relatively low delivery pressures in the southeast part of the development, result in pressures falling to the EPA minimum emergency delivery pressure of 20 psi. We recommend modeling the entire water supply system to develop a combination of offsite improvements to provide the necessary fire flows. Such improvements may also be expected to improve water quality by reducing the travel time from treatment to the subdivision, along with reducing the amount of older CI water mains along the flow path which may be adversely affecting water quality.

The water main along Linden Court should be looped, if possible. The long length of un-looped 6-inch and low delivery pressure limits the available fire flow at this location. If looping the main is not feasible, the western approximately 400 feet should be replaced with an 8-inch water main. Replacement of the entire length would not be necessary or recommended due to the potential for water quality issues near the end of the main. The volume per foot in an 8-inch main is nearly twice that of a 6-inch water main, making turnover of the 8-inch main problematic if a low number of homes are served.

If replacement is pursued in lieu of rehabilitation, upsizing the water mains along the north and south orientated streets such as Ridgewood and Woodland would be beneficial, along with Birch Lane (unless the Ridgewood improvement was extended north to 55th Street). Upsizing the water mains along other east-west orientated streets would provide little fire flow benefit and could adversely affect water quality by increasing the delivered water age.

We recommend that the Village begin a long term program of addressing all of the existing water mains with rehabilitation or replacement as discussed above. Estimated costs per street are included in Appendix A.

As the Village continues to monitor water quality in the subdivision, we recommend installation of a hydrant flushing station as discussed above. If the hydrant flushing station does not address water quality issues adequately, a chlorine booster station may be the next step.

3. SANITARY SYSTEM

3.1 Existing Conditions

The sanitary sewer system within the Ridgewood Subdivision consists of approximately 19,300 lineal feet of pipe ranging in size from 8-inch diameter to 10-inch diameter. The Village recently hired a contractor to clean and televise all of the sewers in the study area. An initial review of the CCTV inspections were performed by Village Staff. That review flagged nine sewer segments that require repair. Baxter & Woodman, Inc. reviewed the inspection videos and provided recommendation for repair of these nine segments. Exhibit 13 is provided to show the sewer segments reviewed.

3.2 Recommendations

Our review and reports were made in accordance with the National Association of Sewer Service Companies (NASSCOs) Pipeline Assessment & Certification Program (PACP) standards. Repairs or replacement of the sewers have been identified in Appendix B.

Appendix B includes the following repair methods:

1. **Point Repair** – This repair includes excavation and replacement of sewer pipe at specific defect locations. This repair method is recommended for defects where the sewer is out-of-round, the cross-sectional area of the pipe is reduced to less than 90% of the pipe's original cross-sectional area, or where pieces of pipe have significant displacement.

2. **Full Length Liner** – This repair process involves inserting a flexible liner into the host pipe through a manhole, expanding the liner to the shape of the pipe, then curing the liner in-place to form a rigid structural repair. The finished product is at least as strong as the original pipe and is expected to have a 50-year design life. The final product does not contain any joints within the repair, which eliminates the possibility of future leaks due to joint separation or root intrusion. Other advantages of this repair method are that it is usually significantly less expensive than open cut replacement, causes minimal disruption; and services can be reconnected without excavation.

3. **Trim Lateral** – Building laterals that extend into the mainline sewer more than one-inch require trimming prior to lining. This work is typically performed using either a spinning blade or a robotic machine with a grinding wheel attachment.

4. **Root Cutting** – Root cutting is typically performed during regular sewer maintenance or a television inspection, but is also necessary prior to a liner installation.

All of the nine sanitary sewer segments reviewed require repair. Of the nine sewer segments reviewed, one is in need of immediate attention. The sewer segment on Lawn Drive from Manhole 581 to Manhole 582 is close to a full collapse. Approximately ten feet should be excavated and

repaired as soon as possible. The other eight sewer segments require various degrees of repair, and should be repaired within the next year.

Opinion of Probable Costs

Appendix B also summarizes the work and construction costs proposed for the repairs of the sanitary sewers. The costs have been summarized below and are based on 2015 construction costs.

Opinions of Probable Construction and Total Repair Costs

Full Length Sewer Lining	$ 85,370
Excavation & Repair	$ 9,000
Lateral Trimming	$ 250
Root Cutting	$ 1,500
Subtotal Construction	$ 96,120
Contingency (5%)	$ 4,880
Engineering Design	$ 10,000
Engineering Construction	$ 10,000
Total Project Cost	**$121,000**

We recommend the City budget approximately $121,000 for repairs and replacements of the sanitary sewer located in the Ridgewood neighborhood.

4. STORM SYSTEM

The Ridgewood Subdivision is drained by a separate storm sewer system which generally flows east to west and discharges to Flag Creek at several outfall locations. Storm sewer pipes in the neighborhood range in size from 6 inches to 42 inches in diameter. The roadway drainage system is a closed system consisting of curb and gutter, storm sewer and curb inlets which collect runoff. Generally, overland flow travels northwest through the subdivision within roadways and through rear and side yard drainage ways. Additionally, a roadside drainage ditch located south of 55th Street carries flow, including discharges from the subdivision's storm sewer system, west to Flag Creek.

Approximately 404 acres drain to the Ridgewood Subdivision drainage system, with approximately 281 acres outside the subdivision limits. The most significant source of offsite tributary drainage is approximately 188 acres located east of the Ridgewood Subdivision. This stormwater runoff flows west under Wolf Road at two culvert crossings and enters the Ridgewood drainage system. Both onsite and offsite tributary drainage areas are primarily residential with soils having a high clay content and low infiltration potential.

The Ridgewood Subdivision experienced significant flooding during a high intensity rainfall event which occurred in late August of 2014. Village rainfall records indicate over 4 inches of rain fell within a 45-minute period, exceeding the Illinois State Water Survey's *Bulletin 70* 100-year, 1-hour design rainfall event for northeast Illinois. The capacity of the subdivision's storm sewer system was exceeded, and flooding observed was the worst in recent years. Per the October 23, 2014 memorandum, prepared by James J. Benes and Associates, Inc. (Benes), the area along Ridgewood Drive between Longmeadow Lane and Crest Lane experienced the most severe flooding.

Although the flooding of August 2014 was extraordinary in nature, B&W understands residents reported occasional flooding at Ridgewood Drive and other locations within the subdivision prior to the August 2014 rainfall event. Other known flooding issues within the subdivision include:

- Flooding of the fire station parking lot located just south of 55th Street and Grand Avenue;
- Rear yard flooding at the Longmeadow Lane cul-de-sac located just west of the fire station;
- Drainage to Linden Court which causes rear and side yard flooding;
- Ponding along Birch Lane where storm sewer and curb inlets are not present, and;
- Flooding at various low areas throughout the subdivision, including at Linden Court and at Lawn Drive between Lawn Court and Lawn Circle.

As part of this study, B&W performed hydrologic and hydraulic analyses using XP Solutions XP-SWMM modeling software to evaluate the existing drainage infrastructure within the subdivision. An alternatives analysis was performed to analyze possible flood reduction improvements.

4.1 Data Collection and Review

B&W recovered, reviewed and utilized the following information:

- Geographic Information System (GIS) sewer data, contour mapping, roadway information and parcel boundaries;
- Aerial photography;
- Federal Emergency Management Agency (FEMA) Flood Insurance Rate Maps (17031C0466J and 17031C0467J) and the Cook County Flood Insurance Study;
- Natural Resources Conservation Service (NRCS) Soil Survey;
- Drainage memorandum prepared by Benes and dated October 23, 2014;
- Engineering plans and survey data for the existing fire station parking lot, the existing Heritage Estates detention basin, and the proposed 5700 Ridgewood Drive overland flow project, and;
- Photographs and videos of flooding within the subdivision.

Additionally, field reconnaissance was performed on July 7, 2015 to investigate the existing drainage systems.

4.2 Existing Conditions Analysis

4.2.1 Hydrology

In 2001, B&W prepared an Autodesk Hydraflow model of the Ridgewood Subdivision storm sewer system for the Village of Western Springs. Drainage area boundaries and hydrologic input data from that study were utilized for the current XP-SWMM analysis where appropriate. Some areas included in the 2001 study were modeled in expanded detail, requiring additional drainage divides and revised hydrologic parameters. Drainage areas outside the 2001 study limits were delineated using the County 1-foot topography and aerial photography. Hydrologic parameters for drainage areas outside the 2001 study limits were derived from review of the County 1-foot topography, aerial photography, and the NRCS Soil Survey. Drainage divides for areas tributary to the Ridgewood Subdivision are shown in Figure 2.

Rainfall data was derived from *Bulletin 70* northeast sectional rainfall depths along with appropriate Huff distributions. Durations ranging from 30 minutes to 24 hours were evaluated for the 2-, 10- and 100-year frequency events.

FIGURE 2

Tributary Drainage Area Map

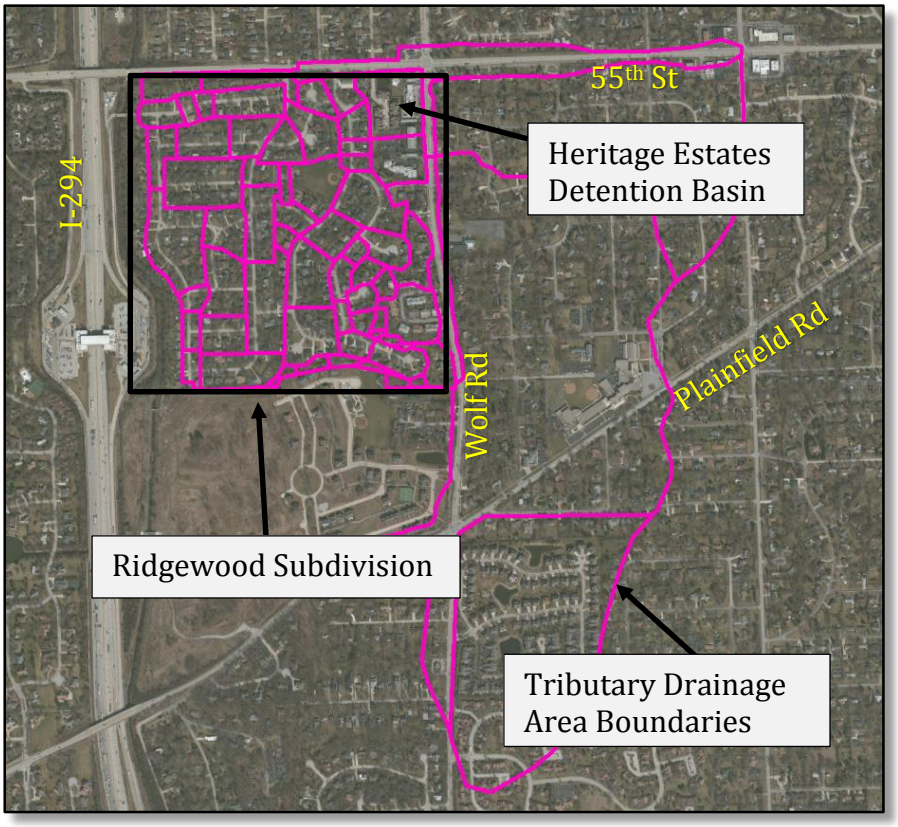

Most of the upland tributary drainage to the Ridgewood Subdivision were developed without detention. However, detention facilities are present in the residential area located south of 60th Street and east of Wolf Road. Detained areas were entered into the model as constant flow inputs. Allowable release rates were calculated based on the Metropolitan Water Reclamation District (MWRD) Schedule D detention requirements which were in affect prior to adoption of the current MWRD Watershed Management Ordinance (WMO). The following standard equation was utilized:

Allowable Release Rate, Q = CIA (cubic feet per second or cfs), with:

Runoff Coefficient, C = 0.15
I = 3-Year Rainfall Intensity (in/hr)
A = Area (acres)

Storage routings were included in the model to account for storage volume provided by the Heritage Estates detention basin and storage volume upstream of the Wolf Road culvert crossings. Stage-elevation data was derived from the Cook County 1-foot topography.

4.2.2 Hydraulics

The modeled XP-SWMM storm sewer network includes all pipes from B&W's 2001 StormCAD model, as well as several additional sewers shown on the Village's GIS sewer atlas. Pipe input data was obtained from the Village's GIS sewer atlas mapping. Where pipe elevation data was not available, storm sewer inverts were estimated based on known adjacent pipe and ground slopes. Structure rim elevations were estimated based on the County 1-foot topography.

Overland flow was modeled along roadways, rear and side lot drainage swales, roadside drainage ditches, and other locations identified as significant overland flow paths. Roadway cross section geometry was based on representative cross sections of typical residential roadway with curb and gutter. Cross section geometry for rear and side yard drainage was input as a representative swale section.

FIGURE 3

XP-SWMM Model Schematic

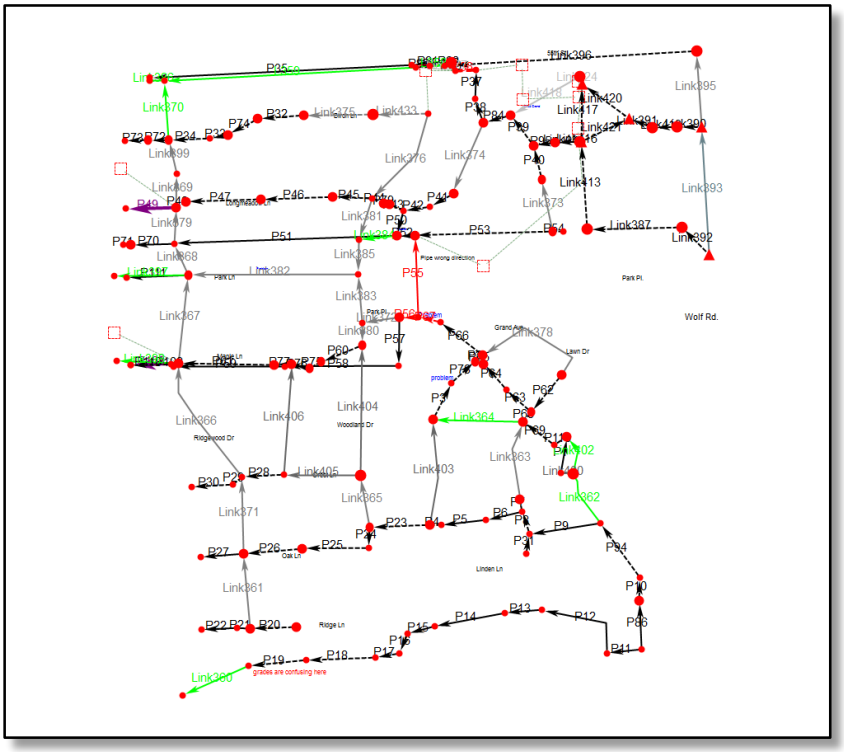

Tailwater condition, or the elevation of the water surface immediately downstream of the study area, is an important consideration for evaluating the capacity of the existing sewer system. Neighborhood sized storm sewer networks typically have a relatively short time of concentration, meaning the peak discharge from the storm sewer system occurs a short time after the beginning of the storm event. Larger watersheds, such as the 5.1 square mile tributary drainage area to Flag Creek at 55th Street,

typically have longer times of concentrations and take longer to reach their peak discharge and corresponding high water level. Therefore, the peak discharge from a neighborhood sewer system is not likely to coincide with the high water surface elevation of the receiving water. When modeling a neighborhood sized storm sewer system that discharges to a waterway with a larger tributary drainage area, the generally accepted practice is to set the 100-year tailwater conditions at the 10-year flood elevation of the receiving waterway.

Outfalls located along Flag Creek were modeled as free outfalls for the 2- and 10-year storm analysis, representing 2-year tailwater elevations. For the 100-year storm analysis, a tailwater sensitivity analysis was performed using 10-year and 50-year flood elevations of Flag Creek. Flood profile elevations were determined using page 135P of the Cook County FEMA Flood Insurance Study (FIS) study. It should be noted that the model assumes the existing storm sewer outfalls are in good condition and unobstructed. Field inspection of the outfalls revealed that several outfall sewers are partially blocked by debris or collapsed.

4.2.3 Results

The XP-SWMM model reports numerous instances of street flooding and storm sewers flowing at capacity throughout the subdivision during events frequency events as low as the 2-year storm. Results for the 10-year storm indicate a large portion of the Ridgewood Subdivision's storm sewer capacity is exceeded.

Model results indicate the most severe street flooding in the subdivision occurs along Ridgewood Drive, where stormwater collects in an expansive low area drained only by storm sewer. The model reports flooding depths of up to 1.5 feet during the 2-year storm event and 2.5-feet during the 100-year event.

The model reports significant overflow from the Heritage Estates detention basins ranging from 6 cfs in the 2-year event to 192 cfs in the 100-year event. Significant overland flow is also reported along Longmeadow Lane, ultimately reaching and contributing to flooding at Ridgewood Drive. However, Village staff has noted that positive longitudinal roadway slope along Longmeadow has prevented problematic flooding depths in that area.

Flooding reported by the XP-SWMM model appears to be representative of flood reports, observations, and photographs and videos of past flooding within the subdivision.

4.3 Flooding Problem Areas

B&W evaluated improvements to address significant drainage issues within the Ridgewood Subdivision, focusing on the four flooding problem areas identified in this section. These areas were assigned priority following review of the existing conditions XP-SWMM model results, consideration of flooding observations and reports, and coordination with Village staff.

4.3.1 Area 1: Ridgewood Drive

Ridgewood Drive was identified as the highest priority flooding area within the subdivision. The roadway between Longmeadow Lane and Maple Lane is known to flood frequently and severely, affecting a significant number of homes. Existing conditions XP-SWMM model results appear to be consistent with observed flooding.

FIGURE 4

Ridgewood Drive, South of Maple Lane

The flood prone portion of Ridgewood Drive is situated within a depression drained only by storm sewer up to the elevation at which water overflows to Flag Creek through adjacent side yards. The lowest points along Ridgewood Drive are located at Longmeadow Lane and Maple Lane, and these locations experience the longest flooding durations and deepest flooding depths. Figure 4 shows evidence of ponding and poor drainage at Ridgewood Drive following a minor rainfall event in April of 2015, including wet and deteriorating pavement

4.3.2 Area 2: Heritage Estates Detention Basin Overflow

Overland flow from the Heritage Estates detention basin was identified as the second highest priority flooding area within the Ridgewood Subdivision. B&W understands that severe flooding has occurred at this location more frequently in recent years. Flooding impacts the parking lots immediately west of Heritage Court, the two adjacent homes, and downstream areas. Figure 5 shows related street flooding along Grand Avenue which occurred in June of 2015.

The Heritage Estates detention basin receives stormwater discharge from areas upstream of the subdivision including approximately 188 acres of tributary drainage located east of Wolf Road. The

basin bypasses flow through a box culvert under Heritage Court and then up through a 7-foot by 8-foot rectangular grate which discharges to the adjacent parking lots. Flow continues through the parking lots and neighboring yards to Grand Avenue. The overflow structure is shown in Figure 5 below. Available data indicates rim elevations for two parking lot inlets located west of Heritage Court are lower than the detention basin high water elevation. This condition makes the inlets susceptible to surcharging. However, as-built drawings indicate that a check valve was installed to prevent backflow from the detention basin.

B&W understands that the Village has attempted to address flooding through this area by providing underground detention under the fire station parking lot. B&W performed a preliminary assessment of underground detention at this location and determined it would be insufficient to eliminate flooding for any of the rainfall events analyzed in this study.

FIGURE 5

Flood Waters Flowing South Along Grand Avenue, June 2015

FIGURE 6

Heritage Estates Detention Basin Overflow Structure

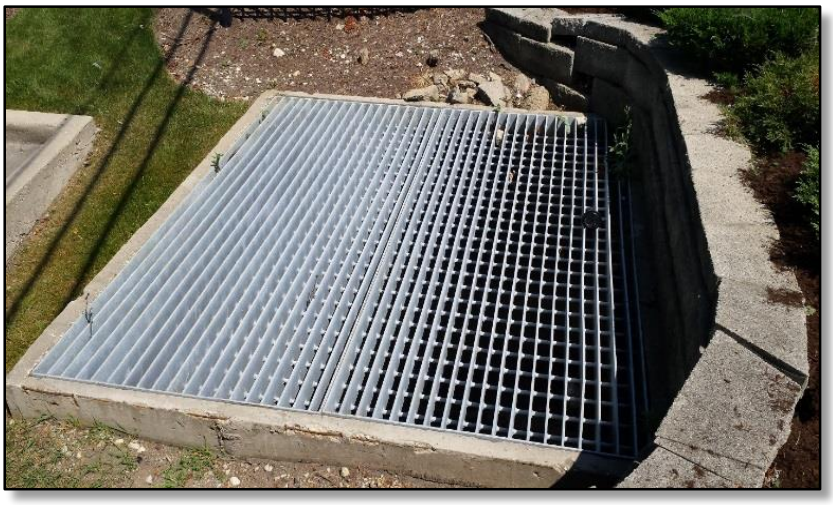

4.3.3 Area 3: Birch Lane

Birch Lane flooding was identified as a medium priority area. The eastern half of Birch Lane is very flat and does not contain any storm sewer inlets. B&W understands that flooding along Birch Lane occurs frequently and affects several residents. However, flooding is typically minor because the existing roadway provides positive drainage, and flooding does not affect any residences. Figure 7 shows Birch Lane just west of Woodland Drive during a minor rainfall event in April of 2015.

FIGURE 7

Birch Lane, West of Woodland Drive

4.3.4 Area 4: Longmeadow Lane Cul-De-Sac

Rear yard flooding at the Longmeadow Lane cul-de-sac, near Woodland Drive and 55th Street, was identified as a medium priority area. A low depressional area in two rear yards collects stormwater runoff from surrounding areas and does not appear to be drained by storm sewer.

4.4 Drainage Improvement Evaluation

Proposed drainage improvements were developed to address flooding at the four identified flooding problem areas. Some of the improvements address an individual area. Others provide flood reduction benefits at multiple locations.

4.4.1 Ridgewood Drive: Alternates 1A and 1B

Description: Upsize storm sewer outlets to Flag Creek at Longmeadow Lane and Maple Lane to address flooding at Area 1 (Ridgewood Drive).

Estimated Cost: 1A - $1,710,000, 1B - $2,320,000

Frequency and severity of roadway flooding can be reduced significantly by upsizing the outfall sewers to Flag Creek west of Longmeadow Lane and Maple Lane and increasing inlet capacity along Ridgewood Drive, as shown on Exhibits 1 and 2. Storm sewer configuration and type, number, and location of inlets will be determined in the design phase. Scour countermeasures, such as a riprap apron and plunge pool, should be designed and implemented at the outfall location to mitigate potential erosion due to flow rate and velocity increases. Headwalls and wingwalls should be constructed to secure the ends of the pipe and reduce risk for further bank erosion near the outfalls. Alternates 1A and 1B will provide 10- and 100-year protection from pavement flooding, respectively.

Potential downstream impacts due to increased discharges to Flag Creek must be considered. However, evaluation of Flag Creek flooding is beyond the scope of this study. Stormwater storage, such as an underground storage vault under Ridgewood Drive, can be considered to prevent flow increases to Flag Creek for frequency events up to the 100-year storm. However, preliminary analysis indicates approximately 55 acre-feet of storage would be required. The construction cost of providing that volume of underground storage would likely range from $9,500,000 to $29,000,000 depending on the type of storage selected. Additionally, a suitable location is not available to provide that volume of underground storage within the subdivision. Ridgewood Park provides the largest potential footprint for an underground or above ground detention facility, at roughly 1.6 acres. It would be unfeasible to provide more than 1/3 of the required storage volume at that location, and a pump station would be required to drain the storage facility.

The existing Flag Creek storm sewer outfalls near Longmeadow Lane and Maple Lane may be located within drainage or utility easements. The Village should investigate whether easements exist and, if so, whether they are sufficiently sized for construction of the recommend improvements. If not, the Village should acquire a long-term easement.

The following items must also be considered:

- Permitting requirements including MWRD, U.S. Army Corps of Engineers, and IDNR, and;
- Impacts to residents, including potential tree and fence removal;

B&W is aware that the Village intends to construct an overland flow route at 5700 Ridgewood Drive later this year. This project is intended to prevent flooding of homes, but will not eliminate street flooding. When constructed, the overland flow route will serve as the emergency overflow for events which exceed the capacity proposed sewer outfall.

XP-SWMM model results indicate pavement flooding along Ridgewood Road can be eliminated for the 10- and 100-year events by implementing Alternates 1A and 1B, respectively. The model prepared for this study does not include the proposed overland flow rout at 5700 Ridgewood Drive in existing or proposed conditions because it is not yet constructed.

4.4.2 Heritage Estates Detention Basin: Alternate 1

Description: Construct approximately 1,015 lineal feet of 36- to 42-inch diameter storm sewer which will convey overflow from Heritage Estates detention basin to the 55th Street ditch. Add rear yard inlets at the Longmeadow Lane cul-de-sac. This alternate will primarily address flooding at Area 2 (Heritage Estates Detention Basin Overflow). It will also drain Area 4 (Longmeadow Lane Cul-De-Sac) and reduce flooding at Area 1 (Ridgewood Drive).

Estimated Cost: $1,690,000

Alternative 1 includes the following improvements, as shown on Exhibit 3:

- A relief storm sewer will be constructed from the Heritage Estates detention basin to accept flow as water levels approach or exceed the current basin overflow elevation. The sewer will discharge to the existing drainage ditch south of 55th Street, which is under the jurisdiction of the Illinois Department of Transportation (IDOT). An IDOT permit would be required for this work. However, it will be necessary to regrade the ditch to lower the profile. Alternately, a pump station could be installed to pump water up to the existing ditch.

- In order to maintain the functionality of the Heritage Estates detention basin, a weir overflow structure will be constructed upstream of the proposed Heritage Estates detention basin outlet to control the water level at which the proposed sewer will accept flow.

- A 12-inch storm sewer lateral and two rear yard inlets will be added to drain the rear yards of the Longmeadow Lane cul-de-sac.

- Scour countermeasures, such as a riprap apron and a plunge pool, should be designed and implemented at the sewer outfall location to mitigate potential erosion due to flow rate and velocity increases. A headwall and wingwalls should be constructed to secure the end of the pipe and reduce risk of bank erosion.

As noted above for Ridgewood Drive Alternates 1A and 1B, potential downstream impacts resulting from increased discharges to the Flag Creek must be considered. However, evaluation of Flag Creek flooding is beyond the scope of this study. Routing flow from the new outlet to a stormwater storage facility can be considered to prevent flow increases to Flag Creek for frequency events up to the 100-year storm. A possible location for underground storage might be the baseball field at Ridgefield Park. However, preliminary analysis indicates approximately 50 acre-feet of storage would be required. The cost of providing that volume of underground storage would likely exceed $8,500,000. Additionally, a suitable location is not available to provide that volume of underground storage within the subdivision.

The following items must also be considered:

- Permitting requirements including MWRD and IDNR;
- Potential impacts to residences along the 55th Street Ditch;
- Armoring of the ditch to prevent erosion;
- Potential relocation of the existing sanitary main running parallel to the ditch, and;
- Easement acquisition.

XP-SWMM model results show that overland flow through the fire station parking lot will be eliminated for storm events up to and including the 10-year event. Greater levels of flood protection are not practical without a pump station.

4.4.3 Heritage Estates Detention Basin Overflow: Alternates 2A and 2B

Description: Construct approximately 2,500 lineal feet of storm sewer which will convey overflow from Heritage Estates detention west along Birch Lane to Flag Creek. Add rear yard inlets at the Longmeadow Lane cul-de-sac. Add curb inlets along Birch Lane. This alternate will primarily address flooding at Area 2 (Heritage Estates Detention Basin Overflow). It will also drain Area 4 (Longmeadow Lane Cul-De-Sac) and reduce flooding at Areas 1 (Ridgewood Dr.) and 3 (Birch Lane).

Estimated Cost: 2A - $2,620,000, 2B - $3,480,000

Alternates 2A and 2B, shown on Exhibits 4 and 5, incorporate the improvements proposed in Alternate 1. However, instead of discharging to the 55th Street ditch, the storm sewer will turn south at Woodland Drive and continue west along Birch Lane to a new outfall at Flag Creek. Alternates 2A and 2B provide 10- and 100-year flood protection, respectively.

Storm sewer inlets will be added along Birch Lane to address existing drainage issues at eastern half of the roadway. Configuration of storm sewer laterals and type, number, and location of inlets will be determined in the design phase.

As noted for Ridgewood Drive Alternates 1A and 1B and Heritage Estates Detention Basin Alternate 1, potential downstream impacts resulting from increased discharges to Flag Creek must be considered. Routing flow from the new outlet to a stormwater storage facility can be considered to prevent flow increases to Flag Creek for frequency events up to the 100-year storm. A possible

location for underground storage would be the baseball field west of Grand Avenue. However, preliminary analysis indicates approximately 50 acre-feet of storage would be required. The cost of providing that volume of underground storage would likely range from $8,500,000 to $26,000,000 depending on the type of storage selected. Additionally, it would be unfeasible to provide much more than 1/3 of the required storage volume at that location, and a pump station would be required to drain the storage facility.

The following items must also be considered:

- Permitting requirements including MWRD, U.S. Army Corps of Engineers, and IDNR, and;
- Easement acquisition.

XP-SWMM model results indicate Alternates 2A and 2B will eliminate overland flow through the fire station parking lot for the 10- and 100-year events, respectively.

4.4.4 Birch Lane

Description: Extend the existing Birch Lane Storm Sewer to Woodland Drive. Add rear yard inlets at the Longmeadow Lane cul-de-sac. This alternate will primarily address flooding at Area 3. It will also drain Area 4.

Estimated Cost: $780,000

Alternate 3 includes extension of the existing 12-inch diameter storm sewer along Birch lane and installation of curb inlets to collect stormwater runoff, as shown on Exhibit 6. Inlet spacing and locations will be determined during the design phase.

The upstream end of the Birch Lane sewer extension will be located near the rear yard depressions at the north Longmeadow Lane cul-de-sac. The storm sewer can be extended north along Woodland Drive and two rear yard inlets can be installed.

XP-SWMM model results show that extending the existing 12-inch diameter sewer along Birch Lane will prevent street flooding in low intensity events, but minor street flooding will occur in events as frequent as the 2-year event.

4.4.5 Combination

Description: Combine Heritage Estates Detention Basin Alternate 2B and Ridgewood Drive Alternate 1B. This alternate will primarily address flooding at Area 1 (Ridgewood Drive) and Area 2 (Heritage Estates Detention Basin Overflow). It will also drain Area 4 (Longmeadow Lane Cul-De-Sac) and eliminate flooding at Area 3 (Birch Lane).

Estimated Cost: $5,540,000

This alternate, shown on Exhibit 6a, will incorporate the improvements proposed in Heritage Estates Detention Basin Alternate 2B and Ridgewood Drive Alternate 1B. However, because some upstream

flows will be diverted away from Ridgewood Drive, the diameter of the Flag Creek outfall sewer located west of the Ridgewood Drive and Longmeadow Lane intersection can be reduced from 60 inches to 36 inches.

As noted for Ridgewood Drive Alternates 1A and 1B and Heritage Estates Detention Basin Alternates 1, 2A and 2B, potential downstream impacts resulting from increased discharges to Flag Creek must be evaluated.

The following items must also be considered:

- Permitting requirements including MWRD, U.S. Army Corps of Engineers, IDNR and;
- Easement acquisition.

XP-SWMM model results indicate this alternate will eliminate flooding along Ridgewood Drive, flow through the fire station parking lot, and flooding along Birch Lane for the 100-year event.

4.5 Summary of Results

XP-SWMM model results comparing existing and proposed conditions flooding are summarized in the following tables. Table 2 presents 10-year model results and Table 3 presents 100-year model results assuming 10-year tailwater conditions. Model results indicated that the effectiveness of the proposed drainage improvements was not affected when utilizing 50-year tailwater conditions.

Each of the alternates considered specifically addresses flooding at one or more of the flooding areas evaluated in the study. Although Heritage Estates Detention Basin Alternates 2A and 2B provide flood benefits at all four of the areas evaluated, it will not eliminate flooding at all of those locations. Combining those drainage alternates with a variation of the Ridgewood Drive drainage alternates will provide a more comprehensive solution.

TABLE 2

XP-SWMM Model Results - 10-Year

Proposed Improvement	Estimated Cost	Maximum Flood Depth (ft)			Peak Overland Flow (cfs)
		Area 1: Ridgewood (at Longmeadow)	Area 1: Ridgewood (at Maple)	Area 3: Birch Lane	Area 2: Heritage Estates Detention Overflow
Existing	NA	2.1	2.3	0.3	44
Ridgewood 1A	$1,710,000	0.0	0.0	0.3	44
Ridgewood 1B	$2,320,000	0.0	0.0	0.3	44
Heritage 1	$1,690,000	1.4	1.6	0.3	0
Heritage 2A	$2,620,000	1.4	1.6	0.0	0
Heritage 2B	$3,480,000	1.4	1.6	0.0	0
Birch Lane	$ 780,000	2.1	2.3	0.3	44
Combination	$5,540,000	0.0	0.0	0.0	0

TABLE 3

XP-SWMM Model Results - 100-Year, 10-Year Tailwater

Proposed Improvement	Estimated Cost	Maximum Flood Depth (ft)			Peak Overland Flow (cfs)
		Area 1: Ridgewood (at Longmeadow)	Area 1: Ridgewood (at Maple)	Area 3: Birch Lane	Area 2: Heritage Estates Detention Overflow
Existing	NA	2.5	2.3	0.5	192
Ridgewood 1A	$1,710,000	1.8	1.6	0.5	192
Ridgewood 1B	$2,320,000	0.0	0.0	0.5	192
Heritage 1	$1,690,000	2.4	2.3	0.6	126
Heritage 2A	$2,620,000	2.4	2.3	0.2	132
Heritage 2B	$3,480,000	2.3	2.3	0.2	2
Birch Lane	$ 780,000	2.5	2.3	0.5	192
Combination	$5,540,000	0.0	0.0	0.2	2

4.6 Conclusions

Upsizing the storm sewer outfalls west of Ridgewood Drive at Longmeadow Lane and Maple Lane, as proposed in Ridgewood Drive Alternates 1A and 1B and the Combination alternate, will address the most severe flooding area within the subdivision and provide benefits to a significant number of residents. The length of sewer reconstruction is short relative to the flood reduction provided, making it a cost effective flood control project. Roadway flooding along Ridgewood Drive will be eliminated for storm events up to the design level of protection. The separate overland flow route project planned at 5700 Ridgewood Road will serve as an emergency overflow and prevent flooding of homes during larger storm events.

Heritage Estates Detention Basin Alternates 1, 2A, and 2B will reduce flooding at several areas within the subdivision. However, they are also costly and would not eliminate roadway flooding at Ridgewood Drive for any of the storm events evaluated.

The Birch Lane storm sewer extension would be relatively low in cost and construction would cause minimal disruption to residents. However, benefits may be limited to frequent, low intensity events.

The Combination alternate is the most costly option considered. However, it only improvement which will provide 100-year flood protection for all of the flooding problem areas evaluated in this study.

4.7 Recommendations

First and foremost, potential downstream impacts must be considered for all proposed improvements which will increase discharges to Flag Creek. B&W's primary recommendation is construction of the Combination alternate to provide comprehensive flood protection for all of the

areas evaluated in this study. These improvements can be implemented using a phased approach as outlined in subsection 4.7.2.

As a secondary recommendation, B&W suggests addressing the smaller scale drainage issues within the subdivision, including flooding along Birch Lane and at the rear yards of the Longmeadow Lane cul-de-sac. However, benefits may be limited to frequent, low intensity events. Other known flooding areas which were not evaluated in detail as part of this study can also be considered.

4.7.1 Other Recommendations

The following recommendations are in addition to those related to the four areas evaluated as part of the XP-SWMM analysis performed for this study:

- Existing Sewer Outfalls – B&W staff inspected several of the existing storm sewer outfalls to Flag Creek with Village staff on July 7, 2015. Conditions of the outfall sewers varied. The outfalls west of the Ridgewood-Longmeadow and Ridgewood-Crest intersections were found to be in need of immediate repairs. Observations included collapsed pipe sections, separated pipe joints, and significant erosion of bank material. Outfalls at these locations should be reconstructed and scour countermeasures, such as riprap aprons and plunge pools, should be designed and implemented to mitigate potential erosion. Additionally, headwalls and wingwalls should be constructed to secure the ends of the pipe and reduce risk for further bank erosion near the outfalls. During inspection of the outfalls, it was noted that some of the outfalls are corrugated metal pipe (CMP). These pipes typically have a shorter lifespan than concrete pipes. CMP sections should be monitored and replaced, preferably with RCP sewer, when they show significant signs of deterioration. Figure 7 and Figure 8 show existing sewer outfalls located along Flag Creek.

- Linden Court – B&W understands that at least one residence at Linden Court experiences rear and side yard flooding, including damage to side yard utilities. Potential drainage improvements in this area could include additional inlets, new/upsized storm sewer, or creation of an overland drainage swale capable of conveying design flows. However, a more detailed analysis of drainage to the area, including the detention basin located south of Linden Court, will be required to evaluate potential improvements. Additionally, site specific survey of the affected properties and at-risk utilities should be performed.

- Lawn Drive – Village staff has indicated ponding occurs at a roadway sag located at Lawn Drive between Lawn Court and Lawn Circle. Preliminary analysis of the area indicates that 10-year flood protection can be provided by adding inlet capacity. Higher levels of flood protection may be achieved by constructing new/upsized storm sewer or providing an overland drainage swale capable of conveying design flows. However, a more detailed analysis of drainage to the area, including the detention basin located south of Linden Court, will be required to evaluate potential improvements.

- Inlet Capacity – Although the capacity of the existing storm sewer system is exceeded in many locations during the 10-year storm event, potential exists to improve drainage at several locations by adding inlet capacity. Adding inlet capacity will be most effective where storm sewer is not flowing at capacity for a specific design storm. Additionally, adding inlets at low

areas which currently don't drain by gravity will reduce inundation durations, even if sewer capacity is not available throughout a rainfall event.

- Overland Flow Routes – Existing overland flow routes, including those through private property, should be maintained. Fill, landscaping and other such obstructions impede flow of stormwater and can create or exacerbate flooding. Opportunities to improve overland flow routes throughout the subdivision should be evaluated, particularly in areas with known drainage issues and where fill may have been placed within overland flow routes. The flow path between Linden Court and Ridgewood Oaks Drive is one area which should be considered for improvements.

FIGURE 8

Existing Storm Sewer Outfall West of Ridgewood Drive and Longmeadow Lane

FIGURE 9

Existing Storm Sewer Outfall West of Ridgewood Drive and Crest Lane

- Smoke Testing - Smoke Testing is a method used to identify defects and inappropriate connections in both the mainline sewer and on private property. Of particular significance, is the ability to identify connections that allow stormwater to directly enter the sanitary sewer system, which can cause immediate and significant increases in flow. These sources include building downspouts, window well drains, area drains, foundation drains and connections to the storm sewer system. Figure 10 shows the typical defects that can be identified by smoke testing.

FIGURE 10

Typical I/I Sources

The testing work consists of injecting a non-toxic chemical smoke under pressure into the sanitary sewer using high capacity blowers. During the test, all smoke emission points are noted and recorded on field reports. Figure 11 provides a visual of this procedure. Typically, digital photographs are also taken of each inappropriate emission point. It is expected that the smoke will be discharged at certain locations such as building vent stacks and adjacent sanitary sewer manhole covers. Other emission points, such as storm sewer inlets and storm sewer manholes, show that smoke can transfer from the sanitary sewer system to the storm sewer system. This suggests that stormwater may also transfer from the storm sewers to the sanitary sewers during rainstorm events.

FIGURE 11

Smoke Testing Concept

- Dyed-Water Testing/Sewer Televising - Dyed-water testing is typically performed in the areas where smoke was identified in the storm sewer system. The test involves isolating the section(s) of storm sewer that emitted smoke with inflatable plugs. The storm sewer is then flooded with dyed water up to the ground surface, simulating a surcharged condition which may occur during an actual rainstorm. Historically, storm sewers were not constructed to be watertight. Therefore, stormwater (dyed-water in this test) exfiltrates the pipes to the surrounding ground and becomes a source of infiltration for nearby defects in the sanitary

sewer system. During this process, the adjacent sanitary sewers are monitored to determine if the dyed water is transferred from the flooded storm sewer to the sanitary sewer. Figure 12 provides a visual of an inflow source.

FIGURE 12

Dyed Water Inflow

In those areas where dyed water enters the sanitary sewer line or where it is suspected that sewer sections under waterways may allow I/I to enter the system, a television inspection is performed in conjunction with dye-testing. The inspection equipment consists of a closed circuit television camera that is passed through the sewer for the purposes of locating and identifying I/I source(s) and observing the condition of the pipe. The sewer sections to be televised are first cleaned by a water-jetting process to enable proper viewing of the sewer. Another benefit to televising a sewer is that structural defects that can escalate into a pipe failure can be readily identified.

- Building-to-Building Canvassing - Building-to-building canvassing involves visiting each address in a study area to conduct a short interview with the property owner to determine the history of flooding within the home or building followed by entry to inspect the storm sump pump system. The discharge location is noted by the inspector where possible. In some cases, the discharge pipe may exit the building below the ground surface or be concealed behind a finished wall. In those cases, a follow up visit is typically conducted to pour dyed-

water into the sump while a downstream sanitary sewer manhole is monitored for signs of the dye.

This is a labor intensive process and often requires scheduling appointments on evenings and weekends if 100% contact is desired. A strong political policy is important for eliminating illegally connected sump pumps. Therefore, many communities conduct canvassing only after all other investigative techniques are exhausted.

4.7.2 Phasing Approach

The major stormwater improvements recommended in this study can be constructed in a phased approach as funding becomes available. B&W recommends the following phasing sequence:

Phase 1: Critical Outfall Repairs

The outfall sewers to Flag Creek west of the Ridgewood-Longmeadow and Ridgewood-Crest intersections are in a state of failure and should be replaced as the first phase of stormwater improvements. The outfall sewer west of the Ridgewood Drive and Longmeadow Lane intersection should be upsized to accommodate future improvements at Ridgewood Drive.

Phase 2: Ridgewood Drive Improvements

Ridgewood Drive drainage improvements should be constructed as the second phase of improvements. The improvements will tie into the upsized outfall sewer west of the Ridgewood-Longmeadow intersection constructed in Phase 1. Additionally, the outfall west of the Ridgewood-Maple intersection will be upsized.

Phase 3: Birch Lane Storm Sewer

During Phase 3, the Birch Lane storm sewer should be replaced, upsized and extended to the low area in the rear yards of the Longmeadow Lane cul-de-sac. The sewer should be sized to accommodate flows from future Heritage Estates detention basin improvements.

Phase 4: Heritage Estates Detention Basin

Phase 4 will include construction of a new overflow structure at the Heritage Estates detention basin. Additionally, a new storm sewer will be constructed which will convey flows from that structure to the Birch Lane storm sewer constructed in Phase 3.

5. PAVEMENT, SIDEWALKS AND LIGHTING

The 3.4 miles of pavement in the Ridgewood Subdivision have been resurface 4 to 5 times since the subdivision was originally constructed in the 1950s. The existing pavement is again in need of resurfacing, but reconstruction may be required based on underground infrastructure improvements. Reconstruction could also help elevate nuisance flooding in the parkway by lowering the roadway profile.

FIGURE 13

PASER Rating Table

Rating system

Surface rating	*Visible distress**	*General condition/ treatment measures*
10 Excellent	None.	New construction.
9 Excellent	None.	Recent overlay. Like new.
8 Very Good	No longitudinal cracks except reflection of paving joints. Occasional transverse cracks, widely spaced (40' or greater). All cracks sealed or tight (open less than 1/4").	Recent sealcoat or new cold mix. Little or no maintenance required.
7 Good	Very slight or no raveling, surface shows some traffic wear. Longitudinal cracks (open 1/4") due to reflection or paving joints. Transverse cracks (open 1/4") spaced 10' or more apart, little or slight crack raveling. No patching or very few patches in excellent condition.	First signs of aging. Maintain with routine crack filling.
6 Good	Slight raveling (loss of fines) and traffic wear. Longitudinal cracks (open 1/4"– 1/2"), some spaced less than 10'. First sign of block cracking. Sight to moderate flushing or polishing. Occasional patching in good condition.	Shows signs of aging. Sound structural condition. Could extend life with sealcoat.
5 Fair	Moderate to severe raveling (loss of fine and coarse aggregate). Longitudinal and transverse cracks (open 1/2") show first signs of slight raveling and secondary cracks. First signs of longitudinal cracks near pavement edge. Block cracking up to 50% of surface. Extensive to severe flushing or polishing. Some patching or edge wedging in good condition.	Surface aging. Sound structural condition. Needs sealcoat or thin non-structural overlay (less than 2")
4 Fair	Severe surface raveling. Multiple longitudinal and transverse cracking with slight raveling. Longitudinal cracking in wheel path. Block cracking (over 50% of surface). Patching in fair condition. Slight rutting or distortions (1/2" deep or less).	Significant aging and first signs of need for strengthening. Would benefit from a structural overlay (2" or more).
3 Poor	Closely spaced longitudinal and transverse cracks often showing raveling and crack erosion. Severe block cracking. Some alligator cracking (less than 25% of surface). Patches in fair to poor condition. Moderate rutting or distortion (1" or 2" deep). Occasional potholes.	Needs patching and repair prior to major overlay. Milling and removal of deterioration extends the life of overlay.
2 Very Poor	Alligator cracking (over 25% of surface). Severe distortions (over 2" deep) Extensive patching in poor condition. Potholes.	Severe deterioration. Needs reconstruction with extensive base repair. Pulverization of old pavement is effective.
1 Failed	Severe distress with extensive loss of surface integrity.	Failed. Needs total reconstruction.

** Individual pavements will not have all of the types of distress listed for any particular rating. They may have only one or two types.*

5.1 Existing Pavement Conditions

B&W staff performed a field evaluation of the streets within the Ridgewood Subdivision in April, 2015 based on the Pavement Surface Evaluation and Rating (PASER) system. The PASER system was developed by the Wisconsin Transportation Information Center to evaluate pavement surface conditions using visual evaluations. The PASER rating system is a condition rating method accepted by the Illinois Department of Transportation (IDOT). A PASER of ten is assigned to newly constructed streets (in good condition) and a PASER of one is assigned to streets in extremely poor condition in

need of complete pavement reconstruction. All streets within the Ridgewood Subdivision were rated a 3 or 4 (PASER rating).

Based on the pavement coring report for the Village's 1995/1996 Street Rehabilitation project, the existing asphalt pavement thickness for many of the streets vary from 2-3/8" to 4-1/4" with the aggregate base course thickness varying from 9" to 14". Subgrade samples generally show tough clay, but there are areas of high moisture content and low compressive strength, which could be leading to premature failure of the pavement. Existing curb and gutter was found to be in acceptable condition with most streets only needed 25% to 30% replacement.

5.2 Proposed Roadway Improvements

Streets with PASER ratings of 3 or 4 are in need of a structural overlay or resurfacing. Structural overlays add pavement thickness to the existing road and are best suited for rural pavements where increases in the roadway pavement elevation can be tolerated. Due to the urban environment, inadequate asphalt pavement thickness, and significant failures present on the streets within the subdivision, full-depth removal and replacement of the asphalt is recommended for all streets within the subdivision. The entire existing asphalt should be removed and repairs made to the underlying aggregate base as required. The existing curb and gutter should also be repaired at isolated spots as required. After repairs have been made the streets should be paved with 2½" of hot-mix asphalt (HMA) binder course and 2" of HMA surface course. This improvement strategy is shown on the typical section on Exhibit 7. The total estimated cost of this improvement strategy, including aggregate base repairs and curb and gutter repairs, is $3,712,000.

Streets requiring utility work within the roadway or the desire to correct drainage issues may warrant complete pavement reconstruction. Minor drainage issues, including nuisance flooding behind the back of curb can be resolved by lowering the roadway profile and sloping the parkways to drain toward the road. Reconstruction can be accomplished with HMA or concrete pavement and are shown on Exhibits 8 and 9. The total estimated costs of these improvement strategies, including full curb and gutter replacement, are $8,379,000 and $9,966,000.

The primary goal of successful pavement management is to rehabilitate streets on a schedule that targets streets just before their condition rapidly declines and becomes far more expensive. Streets with a PASER rating of 3-4 are at this critical point. Delaying pavement rehabilitation at this stage will result in further deterioration and the need for much costlier reconstruction.

A detailed cost estimate for each strategy is shown on Exhibit 10. Both rehabilitation strategies can be phased over multiple years, if necessary, to fit within budget constraints.

5.2.1 Preliminary Sidewalk Design

The Village Board approved a Sidewalk Installation Policy in 2006. Based on a field evaluation, installing a 5' sidewalk directly adjacent to the back of curb will preserve most of the existing trees

in the subdivision. In some cases, it may be beneficial to meander the sidewalk around specific trees located close to the curb. Exhibit 11 shows sidewalk adjacent to back of curb along all streets.

Constructing sidewalk on both sides of the street will add approximately 4 acres of impervious area to the subdivision and create additional storm water runoff. This additional impervious was not accounted for is the storm water analysis of this report. The Cook County Watershed Management Ordinance also requires storm water management (detention) for additional impervious areas greater than 1 acre inside the right-of-way where practical. As detention is not practical within the limits of the right-of-way, a possible exemption should be discussed with the Metropolitan Water Reclamation District of Greater Chicago (MWRD) before proceeding with design.

Sidewalk installation costs vary greatly depending on the scope of adjacent roadway work. Sidewalks constructed as a standalone project require driveway replacement, parkway grading and restoration, traffic control and mobilization, whereas these items are already included in a larger roadway reconstruction project. Therefore, constructing sidewalk on both sides of all streets in the subdivision ranges from $1,453,000 to $2,885,000 depending on any concurrent roadway improvements. These costs also do not reflect any detention requirements from the MWRD. A breakdown of costs by street is included in Exhibit 10.

5.2.2 Street Lighting Plans

There is currently no street lighting in the Ridgewood Subdivision. Although installing street lights at intersections only will not meet minimum illumination standards for the entire subdivision, it will enhance visibility at the place where visibility is most crucial. Exhibit 12 shows a general layout of street lighting at each intersection. The lighting controller ideally should be placed at the center of the lighting improvements to reduce voltage drop throughout the system. Street lighting costs will vary based on the style of light pole chosen by the Village, but will cost between $350,000 and $520,000 or more.

5.2.3 Intersection Improvements

The intersections of Maple Lane and Ridgewood Drive; Maple Lane and Crestview Drive; and Crestview Drive and Woodland Drive are non-standard intersections with no right-of-way control (stop or yield signs). Since these intersections are low-volume, local streets, no control is required. However, if there is any crash history or if these intersections are reconstructed due to infrastructure improvements, we recommend evaluating different intersection alternatives such as mini-roundabouts or standard T-intersections to increase safety, align more with driver expectations and provide additional greenspace.

6. NEXT STEPS

6.1 Water

1. Evaluate any existing water system connections to the La Grange Highlands sanitary district and the overall condition of that connection if it exists.

2. Evaluate installation feasibility for the automatic flushing mechanisms for Linden Court and/or Ridge Lane. A meeting with the product distributor was held at the end of 2015 and staff will be visiting an installation in Darien during the beginning of February. Installation feasibility will be determined during the first quarter of 2016.

3. Continue to measure water quality in the Ridgewood Subdivision.

4. Conduct hydrant flow tests to determine available operating pressures in the subdivision.

5. Future large scale capital improvements such as the installation of new water main, water main lining, the construction of a high service station, or additional connections to Forest Hills will be evaluated as appropriate with other infrastructure improvements in the subdivision.

6.2 Storm Sewer/Sanitary

1. Some short term and immediate recommendations from the report are currently being incorporated into the Village's 2016 Capital Improvement Programs. The Village engineer has recently completed survey work for the Ridgewood Oaks drainage basin and will begin preliminary engineering work for that area, which drains towards Lawn Drive.

2. Engineering work for the repair of at least one sewer outfall has been incorporated into the Village's 2016 roadway program and bids for that program will be going out in mid-March.

3. Additional analysis should be conducted over the next year regarding drainage flowing north to Linden Court from the unincorporated Cook County areas located immediately south.

4. Upsizing of outfalls near Ridgewood Drive will be implemented in the near future, but is currently not budgeted in the 2016 calendar year.

5. Larger improvements regarding any relief sewer should be considered with other infrastructure projects in the subdivision. Additional engineering may require further analysis of tributary stormwater runoff from La Grange Highlands, located east of Wolf Road.

6.3 Roadway

1. Continue to study the roadway surface in the subdivision. New roadway cores and soil borings will be taken in the next 12-24 months to confirm the underlying pavement, base and soil conditions.

2. Additional considerations regarding the road profile, carriage walk, street lighting and intersection improvements will be considered as specific projects in the subdivision. Coordination with infrastructure projects for storm, sanitary and water will need to be considered when roadway schedules are developed.

APPENDIX A – ENGINEER'S OPINION OF PROBABLE COST

Village of Western Springs
Ridgewood Infrastructure Plan - Water Main Replacement

BAXTER & WOODMAN Consulting Engineers

Water Main Replacement

No.	Pay Item	Ex. Diameter (in)	New Diameter (in)	Depth	Quantity	Unit	Unit Price	Amount
1	Ridge Lane	6		6	820	FOOT	$ 200	$ 164,000
2	Ridgewood Drive	6	8	6	2216	FOOT	$ 225	$ 498,600
3	Woodland Dr	6	8	6	1703	FOOT	$ 225	$ 383,175
3	Woodland Dr	8	8	6	301	FOOT	$ 225	$ 67,725
4	Grand Avenue	8		6	2500	FOOT	$ 225	$ 562,500
5	Park Place	6		6	197	FOOT	$ 200	$ 39,400
5	Park Place	8		6	1013	FOOT	$ 225	$ 227,925
5	Park Place	12		6	42	FOOT	$ 225	$ 9,450
6	Linden Ln	8		6	363	FOOT	$ 225	$ 81,675
7	Linden Ct	6		6	747	FOOT	$ 200	$ 149,400
8	Lawn Dr	6		6	1337	FOOT	$ 200	$ 267,400
8	Lawn Dr	8		6	250	FOOT	$ 225	$ 56,250
9	Birch Ln	6	8	6	1320	FOOT	$ 200	$ 264,000
10	Longmeadow Ln	6		6	1763	FOOT	$ 200	$ 352,600
10	Cul-de-sac	6		6	182	FOOT	$ 200	$ 36,400
10	Connection to Woodland	6		6	184	FOOT	$ 200	$ 36,800
11	Park Ln	6		6	767	FOOT	$ 200	$ 153,400
12	Maple Ln	6		6	529	FOOT	$ 200	$ 105,800
13	Crest Ln	6		6	552	FOOT	$ 200	$ 110,400
14	Oak Ln	6		6	873	FOOT	$ 200	$ 174,600
15	Lawn Ct	6		6	316	FOOT	$ 200	$ 63,200
16	Lawn Cir	6		6	240	FOOT	$ 200	$ 48,000
17	Crestview	6		6	804	FOOT	$ 200	$ 160,800
18	Flushing Station			N/A	1	EACH	$ 3,500	$ 3,500
19	Chlorine Booster Station			N/A	1	EACH	$ 50,000	$ 50,000

	SUBTOTAL, CONSTRUCTION	$ 4,067,000
CONSTRUCTION CONTINGENCY	20%	$ 813,400
	TOTAL, CONSTRUCTION	$ 4,880,400
ENGINEERING, DESIGN	6.0%	$ 292,900
ENGINEERING, CONSTRUCTION	7.5%	$ 366,100
PERMITTING	1.0%	$ 48,900
	PROJECT TOTAL	**$ 5,590,000**

1. Prices include water service replacement/adjustment, new valves, new hydrants, trench backfill, pavement or lawn restoration, traffic control, erosion control, construction layout, and mobilization. Water main replacement costs also assume street reconstruction is being completed.
2. Prices do not include right-of-way acquisition, temporary or permanent easements, or relocating other utilities.
3. Prices are current for 2015.

APPENDIX A – ENGINEER'S OPINION OF PROBABLE COST

Village of Western Springs
Ridgewood Infrastructure Plan - Water Main Replacement

BAXTER & WOODMAN Consulting Engineers

Water Main Lining

No.	Pay Item	Ex. Diameter (in)	Depth	Quantity	Unit	Unit Price	Amount
1	Ridge Lane	6	6	820	FOOT	$ 170	$ 139,400
2	Ridgewood Drive	6	6	2216	FOOT	$ 170	$ 376,720
3	Woodland Dr	6	6	1703	FOOT	$ 170	$ 289,510
3	Woodland Dr	8	6	301	FOOT	$ 175	$ 52,675
4	Grand Avenue	8	6	2500	FOOT	$ 175	$ 437,500
5	Park Place	6	6	197	FOOT	$ 170	$ 33,490
5	Park Place	8	6	1013	FOOT	$ 175	$ 177,275
5	Park Place	12	6	42	FOOT	$ 180	$ 7,560
6	Linden Ln	8	6	363	FOOT	$ 175	$ 63,525
7	Linden Ct	6	6	747	FOOT	$ 170	$ 126,990
8	Lawn Dr	6	6	1337	FOOT	$ 170	$ 227,290
8	Lawn Dr	8	6	250	FOOT	$ 175	$ 43,750
9	Birch Ln	6	6	1320	FOOT	$ 170	$ 224,400
10	Longmeadow Ln	6	6	1763	FOOT	$ 170	$ 299,710
10	Cul-de-sac	6	6	182	FOOT	$ 170	$ 30,940
10	Connection to Woodland	6	6	184	FOOT	$ 170	$ 31,280
11	Park Ln	6	6	767	FOOT	$ 170	$ 130,390
12	Maple Ln	6	6	529	FOOT	$ 170	$ 89,930
13	Crest Ln	6	6	552	FOOT	$ 170	$ 93,840
14	Oak Ln	6	6	873	FOOT	$ 170	$ 148,410
15	Lawn Ct	6	6	316	FOOT	$ 170	$ 53,720
16	Lawn Cir	6	6	240	FOOT	$ 170	$ 40,800
17	Crestview	6	6	804	FOOT	$ 170	$ 136,680
18	Flushing Station		N/A	1	EACH	$ 3,500	$ 3,500
19	Chlorine Booster Station		N/A	1	EACH	$ 50,000	$ 50,000

	SUBTOTAL, CONSTRUCTION	$	3,259,285
CONSTRUCTION CONTINGENCY	20%	$	651,860
	TOTAL, CONSTRUCTION	$	3,911,145
ENGINEERING, DESIGN	6.0%	$	234,700
ENGINEERING, CONSTRUCTION	7.5%	$	293,400
PERMITTING	1.0%	$	39,200
	PROJECT TOTAL	**$**	**4,480,000**

1. Prices include water service reinstatment, new valves, trench backfill, pavement or lawn restoration, traffic control, erosion control, construction layout, and mobilization
2. Prices do not include right-of-way acquisition, temporary or permanent easements, or relocating other
3. Prices are current for 2015.

Village of Western Springs
Ridgewood Infrastructure Plan - Sanitary Sewer Televising Review and Recommendations

BAXTER & WOODMAN Consulting Engineers

Street	From Manhole	To Manhole	Size, in.	Surveyed Length, Ft.	Material	No. of Services	Intruding Lateral	Inspection Complete	Quick Struct. Rating	Heavy Roots	Full Length Liner	Point Repair Required	Recommendation	EOPC Rehabilitation Costs					
														Sewer Lining	Lateral Reinst.	Root Trimming	Trim Lateral	Point Repair	Subtotal
Ridge Lane	299	298	8	101.3	VCP	4	0	5/20/2015	5141	X	X		Full Length Liner	$ 4,560	$ 1,000	$ 310	$ -	$ -	$ 5,870.00
Ridgewood Drive	453	433	10	53.1	VCP	1	0	5/19/2015	-	X	X		Root cut; Full Length Liner (total length unknown)	$ 16,500	$ 250	$ 900	$ -	$ -	$ 17,650.00
Ridge Lane	467	299	8	95.1	VCP	1	0	5/20/2015	3522	X	X		Full Length Liner	$ 4,280	$ 250	$ 290	$ -	$ -	$ 4,820.00
Lawn Drive	555	554	10	101.8	VCP	3	0	5/18/2015	3400		X		Full Length Liner	$ 5,600	$ 750	$ -	$ -	$ -	$ 6,350.00
Lawn Drive	581	582	8	53	VCP	5	1	5/15/2015	5141			X	Immediate 10' Point Repair (40' - 50'); Incomplete Review	$ 10,130	$ 1,250	$ -	$ 250	$ 9,000	$ 20,630.00
Lawn Circle	587	1040	8	217.8	VCP	9	0	5/14/2015	3100		X		Full Length Liner	$ 10,130	$ 2,250	$ -	$ -	$ -	$ 12,380.00
Lawn Drive	631	633	8	119.3	VCP	2	0	5/14/2015	5231		X		Full Length Liner	$ 9,810	$ 500	$ -	$ -	$ -	$ 10,310.00
Linden Court	681	683	8	204.7	VCP	4	0	5/14/2015	5100		X		Full Length Liner	$ 9,220	$ 1,000	$ -	$ -	$ -	$ 10,220.00
Linden Court	683	558	8	153.1	VCP	4	0	5/14/2015	5200		X		Full Length Liner	$ 6,890	$ 1,000	$ -	$ -	$ -	$ 7,890.00
														$85,370		$ 1,500	$ 250.00	$ 9,000.00	**$ 96,120.00**

Village of Western Springs
Ridgewood Infrastructure Plan - Stormwater

BAXTER & WOODMAN Consulting Engineers

Heritage Estates Detention Basin Overflow
Alternate 1

No.	Pay Item	Depth	Quantity	Unit	Unit Price	Amount
1	48" STORM SEWER, REAR YARD	5 - 8	95	FOOT	$ 470	$ 44,650
2	36" STORM SEWER	5 - 8	370	FOOT	$ 385	$ 142,450
3	36" STORM SEWER, REAR YARD	5 - 8	430	FOOT	$ 360	$ 154,800
4	36" STORM SEWER, ROADWAY RECONSTRUCT	5 - 8	200	FOOT	$ 760	$ 152,000
5	12" REAR YARD STORM SEWER	5 - 8	380	FOOT	$ 255	$ 96,900
6	RELOCATE SANITARY SEWER, 10" P.V.C.	N/A	800	FOOT	$ 120	$ 96,000
7	WATER LEVEL CONTROL STRUCTURE	N/A	1	EACH	$ 20,000	$ 20,000
8	BACKFLOW PREVENTER, 18"	N/A	1	EACH	$ 2,000	$ 2,000
9	INLET	N/A	2	EACH	$ 1,200	$ 2,400
10	8' DIAMETER MANHOLE	5 - 8	2	EACH	$ 13,350	$ 26,700
11	7' DIAMETER MANHOLE	5 - 8	5	EACH	$ 11,300	$ 56,500
12	42" RCP, FES	N/A	1	EACH	$ 4,800	$ 4,800
13	STONE RIPRAP APRON, RR-5	N/A	30	SQ. YD.	$ 300	$ 9,000
14	EARTH EXCAVATION, DISPOSAL, GRADING (DITCH)	N/A	3,000	CU. YD.	$ 62	$ 186,000
15	EROSION CONTROL, RESTORATION (DITCH)	N/A	6,000	SQ. YD.	$ 28	$ 168,000
16	CASH ALLOWANCE	N/A	1	L. SUM	$ 50,000	$ 50,000

	SUBTOTAL, CONSTRUCTION	$ 1,212,200
CONSTRUCTION CONTINGENCY	20%	$ 242,440
	TOTAL, CONSTRUCTION	$ 1,454,640
ENGINEERING, DESIGN	6.0%	$ 87,300
ENGINEERING, CONSTRUCTION	7.5%	$ 109,100
PERMITTING	2.0%	$ 29,100
	PROJECT TOTAL	**$ 1,690,000**

1. Prices include sanitary sewer and water service relocation/adjustment, trench backfill, pavement or lawn restoration, traffic control, erosion control, construction layout, and mobilization
2. Prices do not include right-of-way acquisition, temporary or permanent easements, or relocating other utilities.
3. Prices are current for 2015.

Village of Western Springs
Ridgewood Infrastructure Plan - Stormwater

Heritage Estates Detention Basin Overflow
Alternate 2A

No.	Pay Item	Depth	Quantity	Unit	Unit Price	Amount
1	48" STORM SEWER, REAR YARD	5 - 8	95	FOOT	$ 470	$ 44,509
2	36" STORM SEWER	5 - 8	370	FOOT	$ 385	$ 142,450
3	36" STORM SEWER, REAR YARD	5 - 8	430	FOOT	$ 360	$ 154,800
4	36" STORM SEWER, ROAD RECONSTRUCT	5 - 8	1,600	FOOT	$ 700	$ 1,120,000
5	12" REAR YARD STORM SEWER	5 - 8	110	FOOT	$ 255	$ 28,050
6	WATER LEVEL CONTROL STRUCTURE	N/A	1	EACH	$ 20,000	$ 20,000
7	BACKFLOW PREVENTER, 18"	N/A	1	EACH	$ 2,000	$ 2,000
8	ADD INLET CAPACITY (BIRCH)	5 - 8	1	L. SUM	$ 50,000	$ 50,000
9	8' DIAMETER MANHOLE	5 - 8	2	EACH	$ 11,500	$ 23,000
10	7' DIAMETER MANHOLE	5 - 8	16	EACH	$ 9,000	$ 144,000
11	HEADWALL/WINGWALLS - 36" RCP	N/A	1	EACH	$ 6,000	$ 6,000
12	STONE RIPRAP APRON, RR-5	N/A	30	SQ. YD.	$ 300	$ 9,000
13	ABANDON EX STORM SEWER, 12"	5 - 8	740	CU. FT.	$ 20	$ 14,800
14	CASH ALLOWANCE	N/A	1	L. SUM	$ 60,000	$ 60,000

	SUBTOTAL, CONSTRUCTION	$	1,818,610
CONSTRUCTION CONTINGENCY	20%	$	363,725
	TOTAL, CONSTRUCTION	$	2,182,335
ENGINEERING, DESIGN	8.0%	$	174,600
ENGINEERING, CONSTRUCTION	10.0%	$	218,300
PERMITTING	2.0%	$	43,700
	PROJECT TOTAL	**$**	**2,620,000**

1. Prices include sanitary sewer and water service relocation/adjustment, trench backfill, pavement or lawn restoration, traffic control, erosion control, construction layout, and mobilization
2. Prices do not include right-of-way acquisition, temporary or permanent easements, or relocating other utilities.
3. Prices are current for 2015.

Village of Western Springs
Ridgewood Infrastructure Plan - Stormwater

BAXTER & WOODMAN Consulting Engineers

Heritage Estates Outlet
Alternate 2B

No.	Pay Item	Depth	Quantity	Unit	Unit Price	Amount
1	60" STORM SEWER, REAR YARD	5 - 8	95	FOOT	$ 620	$ 58,900
2	60" STORM SEWER, ROAD RECONST	5 - 8	1,450	FOOT	$ 965	$ 1,399,250
3	54" STORM SEWER	5 - 8	370	FOOT	$ 570	$ 210,900
4	54" STORM SEWER, REAR YARD	5 - 8	430	FOOT	$ 540	$ 232,200
5	54" STORM SEWER, ROAD RECONST	5 - 8	150	FOOT	$ 885	$ 132,750
6	12" REAR YARD STORM SEWER	5 - 8	110	FOOT	$ 255	$ 28,050
7	WATER LEVEL CONTROL STRUCTURE	N/A	1	EACH	$ 20,000	$ 20,000
8	BACKFLOW PREVENTER, 18"	N/A	1	EACH	$ 2,000	$ 2,000
9	INLET CAPACITY (BIRCH)	N/A	1	L. SUM	$ 50,000	$ 50,000
10	8' DIAMETER MANHOLE	5 - 8	18	EACH	$ 13,350	$ 240,300
11	HEADWALL/WINGWALLS - 60" RCP	N/A	1	EACH	$ 15,000	$ 15,000
12	STONE RIPRAP APRON, RR-5	N/A	40	SQ. YD.	$ 300	$ 12,000
13	ABANDON EX STORM SEWER, 12"	5 - 8	740	CU. FT.	$ 20	$ 14,800
14	CASH ALLOWANCE	N/A	1	L. SUM	$ 100,000	$ 100,000

	SUBTOTAL, CONSTRUCTION	$	2,516,150
CONSTRUCTION CONTINGENCY	20%	$	503,230
	TOTAL, CONSTRUCTION	$	3,019,380
ENGINEERING, DESIGN	6.0%	$	181,200
ENGINEERING, CONSTRUCTION	7.5%	$	226,500
PERMITTING	1.5%	$	45,300
	PROJECT TOTAL	**$**	**3,480,000**

1. Prices include sanitary sewer and water service relocation/adjustment, trench backfill, pavement or lawn restoration, traffic control, erosion control, construction layout, and mobilization
2. Prices do not include right-of-way acquisition, temporary or permanent easements, or relocating other
3. Prices are current for 2015.

Village of Western Springs
Ridgewood Infrastructure Plan - Stormwater

Ridgewood Drive
Alternate 1A

No.	Pay Item	Depth	Quantity	Unit	Unit Price	Amount
1	42" STORM SEWER, TUNNELED	5 - 8	280	FOOT	$ 1,625	$ 455,000
2	36" STORM SEWER, TUNNELED	5 - 8	250	FOOT	$ 1,500	$ 375,000
3	ADD INLET CAPACITY	N/A	1	L. SUM	$ 250,500	$ 250,500
4	8' DIAMETER MANHOLE	5 - 8	1	EACH	$ 11,000	$ 11,000
5	7' DIAMETER MANHOLE	5 - 8	1	EACH	$ 9,600	$ 9,600
6	HEADWALL/WINGWALLS - 42" RCP	N/A	1	EACH	$ 8,000	$ 8,000
7	HEADWALL/WINGWALLS - 36" RCP	N/A	1	EACH	$ 6,000	$ 6,000
8	STONE RIPRAP APRON, RR-5	N/A	50	SQ. YD.	$ 300	$ 15,000
9	SHAFTS - MANHOLES/RESTORATION	N/A	1	L. SUM	$ 75,000	$ 75,000
10	CASH ALLOWANCE	N/A	1	L. SUM	$ 20,000	$ 20,000

	SUBTOTAL, CONSTRUCTION	$	1,225,100
CONSTRUCTION CONTINGENCY	20%	$	245,020
	TOTAL, CONSTRUCTION	$	1,470,120
ENGINEERING, DESIGN	6.0%	$	88,300
ENGINEERING, CONSTRUCTION	7.5%	$	110,300
PERMITTING	2.5%	$	36,800
	PROJECT TOTAL	**$**	**1,710,000**

1. Prices include sanitary sewer and water service relocation/adjustment, trench backfill, pavement or lawn restoration, traffic control, erosion control, construction layout, and mobilization
2. Prices do not include right-of-way acquisition, temporary or permanent easements, or relocating other utilities.
3. Prices are current for 2015.

Village of Western Springs
Ridgewood Infrastructure Plan - Stormwater

BAXTER & WOODMAN Consulting Engineers

Ridgewood Drive
Alternate 1B

No.	Pay Item	Depth	Quantity	Unit	Unit Price	Amount
1	60" STORM SEWER, TUNNELED	5 - 8	280	FOOT	$ 2,000	$ 560,000
2	48" STORM SEWER, TUNNELED	5 - 8	250	FOOT	$ 1,750	$ 437,500
3	ADD INLET CAPACITY	N/A	1	L. SUM	$ 500,000	$ 500,000
4	8' DIAMETER MANHOLE	5 - 8	2	EACH	$ 11,000	$ 22,000
5	HEADWALL/WINGWALLS - 60" RCP	N/A	1	EACH	$ 15,000	$ 15,000
6	HEADWALL/WINGWALLS - 48" RCP	N/A	1	EACH	$ 10,000	$ 10,000
7	STONE RIPRAP APRON, RR-6	N/A	60	SQ. YD.	$ 400	$ 24,000
8	SHAFTS - MANHOLES/RESTORATION	N/A	1	L. SUM	$ 75,000	$ 75,000
9	CASH ALLOWANCE	N/A	1	L. SUM	$ 25,000	$ 25,000

	SUBTOTAL, CONSTRUCTION	$	1,668,500
CONSTRUCTION CONTINGENCY	20%	$	333,700
	TOTAL, CONSTRUCTION	$	2,002,200
ENGINEERING, DESIGN	6.0%	$	120,200
ENGINEERING, CONSTRUCTION	7.5%	$	150,200
PERMITTING	2.0%	$	40,100
	PROJECT TOTAL	**$**	**2,320,000**

1. Prices include sanitary sewer and water service relocation/adjustment, trench backfill, pavement or lawn restoration, traffic control, erosion control, construction layout, and mobilization
2. Prices do not include right-of-way acquisition, temporary or permanent easements, or relocating other utilities.
3. Prices are current for 2015.

APPENDIX C – SANITARY SEWER EVALUATION SUMMARY OF RESULTS

Village of Western Springs
Ridgewood Infrastructure Plan - Stormwater

Birch Lane

No.	Pay Item	Depth	Quantity	Unit	Unit Price	Amount
1	12" STORM SEWER, ROAD RECONSTRUCT	0 - 5	730	Foot	$ 600	$ 438,000
2	ADD INLET CAPACITY (BIRCH)	N/A	1	L. SUM	$ 50,000	$ 50,000
3	12" REAR YARD STORM SEWER	5 - 8	110	FOOT	$ 255	$ 28,050
4	4' DIAMETER MANHOLE	0 - 5	3	Each	$ 4,600	$ 13,800
5	CASH ALLOWANCE	N/A	1	L. SUM	$ 25,000	$ 25,000

	SUBTOTAL, CONSTRUCTION	$	554,850
CONSTRUCTION CONTINGENCY	20%	$	110,970
	TOTAL, CONSTRUCTION	$	665,820
ENGINEERING, DESIGN	7.5%	$	50,000
ENGINEERING, CONSTRUCTION	7.5%	$	50,000
PERMITTING	2.0%	$	13,400
	PROJECT TOTAL	**$**	**780,000**

1. Prices include sanitary sewer and water service relocation/adjustment, trench backfill, pavement or lawn restoration, traffic control, erosion control, construction layout, and mobilization
2. Prices do not include right-of-way acquisition, temporary or permanent easements, or relocating other utilities.
3. Prices are current for 2015.

APPENDIX C – ENGINEER'S OPINION OF PROBABLE COST

Village of Western Springs
Ridgewood Infrastructure Plan - Stormwater

BAXTER & WOODMAN Consulting Engineers

Combination

No.	Pay Item	Depth	Quantity	Unit	Unit Price	Amount
1	60" STORM SEWER, REAR YARD	5 - 8	95	FOOT	$ 620	$ 58,900
2	60" STORM SEWER, ROAD RECONST	5 - 8	1,450	FOOT	$ 965	$ 1,399,250
3	54" STORM SEWER	5 - 8	370	FOOT	$ 570	$ 210,900
4	54" STORM SEWER, REAR YARD	5 - 8	430	FOOT	$ 540	$ 232,200
5	54" STORM SEWER, ROAD RECONST	5 - 8	150	FOOT	$ 885	$ 132,750
6	12" REAR YARD STORM SEWER	5 - 8	110	FOOT	$ 255	$ 28,050
7	WATER LEVEL CONTROL STRUCTURE	N/A	1	EACH	$ 20,000	$ 20,000
8	BACKFLOW PREVENTER, 18"	N/A	1	EACH	$ 2,000	$ 2,000
9	INLET CAPACITY (BIRCH)	N/A	1	L. SUM	$ 50,000	$ 50,000
10	8' DIAMETER MANHOLE	5 - 8	18	EACH	$ 13,350	$ 240,300
11	HEADWALL/WINGWALLS - 60" RCP	N/A	1	EACH	$ 15,000	$ 15,000
12	STONE RIPRAP APRON, RR-5	N/A	40	SQ. YD.	$ 300	$ 12,000
13	ABANDON EX STORM SEWER, 12"	5 - 8	740	CU. FT.	$ 20	$ 14,800
1	36" STORM SEWER, TUNNELED	5 - 8	280	FOOT	$ 1,500	$ 420,000
2	48" STORM SEWER, TUNNELED	5 - 8	250	FOOT	$ 1,750	$ 437,500
3	ADD INLET CAPACITY (RIDGEWOOD)	N/A	1	L. SUM	$ 500,000	$ 500,000
4	8' DIAMETER MANHOLE	5 - 8	2	EACH	$ 11,000	$ 22,000
5	HEADWALL/WINGWALLS - 36" RCP	N/A	1	EACH	$ 7,000	$ 7,000
6	HEADWALL/WINGWALLS - 48" RCP	N/A	1	EACH	$ 10,000	$ 10,000
7	STONE RIPRAP APRON, RR-6	N/A	60	SQ. YD.	$ 400	$ 24,000
8	SHAFTS - MANHOLES/RESTORATION	N/A	1	L. SUM	$ 75,000	$ 75,000
14	CASH ALLOWANCE	N/A	1	L. SUM	$ 100,000	$ 100,000

	SUBTOTAL, CONSTRUCTION	$	4,011,650
CONSTRUCTION CONTINGENCY	20%	$	802,330
	TOTAL, CONSTRUCTION	$	4,813,980
ENGINEERING, DESIGN	6.0%	$	288,900
ENGINEERING, CONSTRUCTION	7.5%	$	361,100
PERMITTING	1.5%	$	72,300
	PROJECT TOTAL	**$**	**5,540,000**

1. Prices include sanitary sewer and water service relocation/adjustment, trench backfill, pavement or lawn restoration, traffic control, erosion control, construction layout, and mobilization
2. Prices do not include right-of-way acquisition, temporary or permanent easements, or relocating other
3. Prices are current for 2015.

Ice Pigging Potable Water Mains Location: Ridgewood subdivision Completion Date: August 2015 Project Report

Village of Western Springs, Illinois

Prepared For:
Mr. Matthew Supert
Director of Municipal Services

Prepared By:
Paul Treloar
Product Manager-Ice Pigging

Date:
27 October 2015

1230 Peachtree Street NE · Suite 1100 - Promenade · Atlanta, GA 30309
Toll-free: 855.526.4413 | Fax: 888.600.5876 | utilityservice.com

Project Objective

INTRODUCTION

Due to repeated customer complaints of poor taste and odor from the potable water supply, ice pigging was identified as a best solution to remove a suspected biofilm buildup from a section of the water distribution network. A four day project to clean approximately fifteen thousand linear feet of six and eight inch ductile iron pipe was proposed.

In this report, you will find a summary of the project, the results and the recorded data.

PROJECT SCHEDULE

Date	Run #	Insertion Point	Discharge Point	Disposal Method	Length (FT)	Pipe Dia.(in)	Pipe Material	Ice Quantity (Gals)
Day 1	1	L	J	Sewer	500	6	DI	150
Day 1	2	H	R	Sewer	2379	6 & 8	DI	1250
Day 1	3	Q	E	Sewer	4095	6	DI	1200
Day 2	5	M	P	Sewer	1333	6 & 8	DI	700
Day 2	6	G	R	Sewer	3085	6 & 8	DI	1600
Day 3	4	A	O	Sewer	987	6	DI	300
Day 3	7	L	I	Sewer	771	6	DI	250
Day 3	8	W	K	Sewer	872	6	DI	300
Day 3	9	A	B	Sewer	2000	6	DI	600
Day 3	10	T	D	Sewer	1189	6	DI	350
Day 3	11	U	S	Sewer	1420	6	DI	450

COMMENTS

Eight of the proposed runs were completed as scheduled with no major issues.

However, “Run#4” was incomplete due to an apparent opening of a branch valve prior to the arrival of the pig at the discharge end. This action resulted in the loss or disruption of the pig and therefore, no ice samples were taken.

“Run #’s 10 and 11 had to be aborted to a main break in the Village unconnected with the ice pigging project.

Project Data

Total number of runs	**8**
Total length of pipe pigged	15,035 LF
Total sediment removed	181.77 lbs.
Average amount of sediment removed per mile	99 lbs.
Average time for main out of service per run	48 mins

Laboratory Analysis

No laboratory analysis was conducted on this project.

.

Sediment Sample reports attached

SUMMARY AND RECOMMENDATIONS

SUMMARY

In the main, the project went very well and a good level of sediment was removed from the mains.
Utility Service Group has received no indications yet from the Village of Western Springs to verify if the customer complaints have been reduced.

RECOMMENDATIONS

Utility Service Group recommends that regular proactive cleaning be repeated every 3-5 years in the section cleaned under this project and also further cleaning of the entire system to ensure that sediment and biofilm is not being allowed to settle in the distribution network.

ICE PIGGING

Utility Service Group

JOB RECORD/REPORT/SUMMARY

JOB INFORMATION:

Client	GVMA
Date	27-Jul-15
Location	1
Insertion Point	L
Discharge Point	J
Pipe Length	500 Lft
Pipe Diameter	6
Material	DI
Usage	Domestic Water Distribution
Volume of Ice	150 Gallons
Ice Fraction	90%
Total Water Used	2315 Gallons

ONSITE PROCEDURE:

Pre-Clean Readings		Immediate Post-Clean Readings		Change
Turbidity (NTU)	168	Turbidity (NTU)	18.1	-149.9
Temperature (°F)	64.7	Temperature (°F)	64.6	-0.1
Pressure (PSI)	20.2	Pressure (PSI)	43.5	23.3
Conductivity (mS/cm)	0.5	Conductivity (mS/cm)	0.5	0

Timeline:

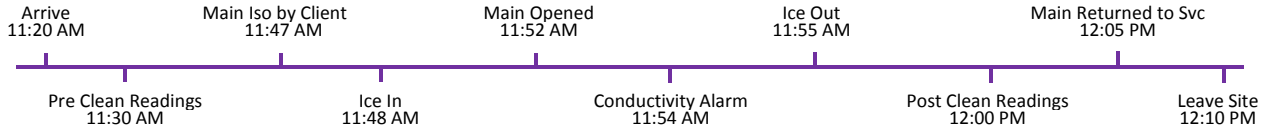

Comments:

Maximum Flow Rate (gpm)	196	Lowest Temperature Reached (°F)	25.7	Ambient Air Temperature (°F)	85

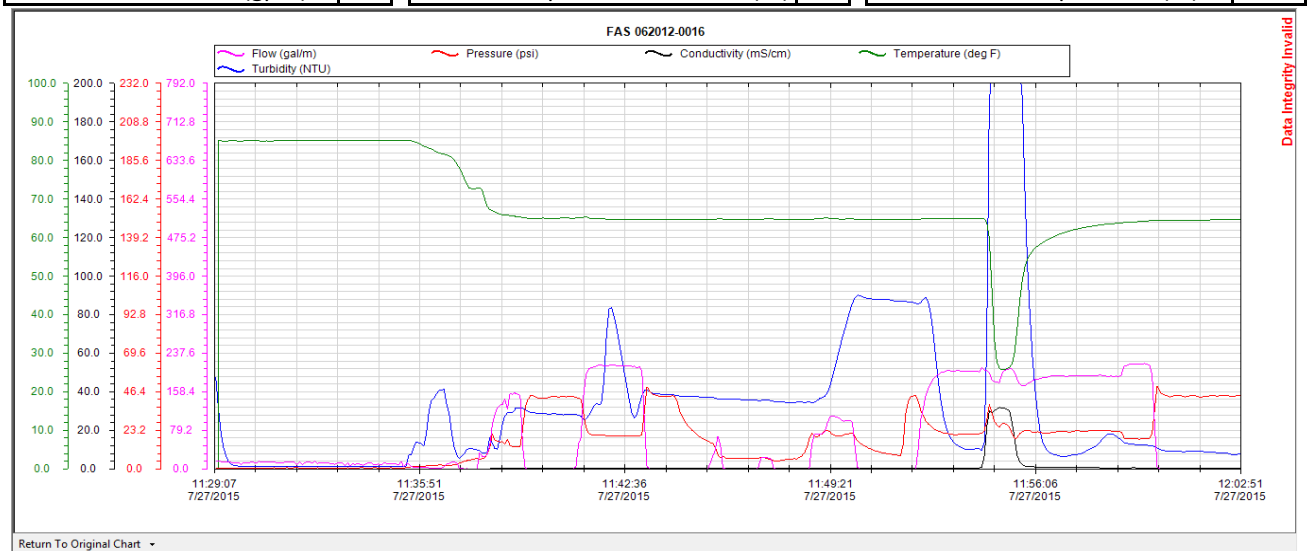

ICE PIGGING

Utility Service Group

JOB RECORD/REPORT/SUMMARY

SEDIMENT DATA:

#	Time (s)	Flow Rate (gal/m)	Temperature (°F)	Conductivity (mS/cm)	Sample Mass (g)	Sed. Mass (g/gal/m)	Sedmt (lb/gal/m)
1	60	196.47	57.8	11.7	0.09	141.46	0.311
2	120	187.95	36.8	16.3	0.16	240.58	0.529
3	180	188.25	59.3	1.0	0.86	1295.19	2.849
4	240	191.42	62.4	0.8	2.60	3981.44	8.759
5	300	195.50	63.6	0.5	1.51	2361.64	5.196
6	360	171.32	64.3	0.5	1.37	1877.70	4.131
7	420	172.54	64.5	0.5	1.23	1697.79	3.735
8	480	171.23	64.6	0.5	1.05	1438.33	3.164
9	540	170.86	64.6	0.5	0.55	751.78	1.654
10	600	171.05	64.1	0.5	0.35	478.94	1.054
11	660	172.01	64.3	0.5	0.06	82.56	0.182
12							
13							
14							
15							
16							
17							
18							
19							
20							
21							
22							
23							
24							
25							
26							
27							
28							
29							
30							

RESULT:

Sediment Removed (lb)	**31.56**	**Sediment Removed per mile (lb)**	**333.89**

The above values are calculated from samples taken every 60 seconds on site. For each sample the flow rate, and the sediment densities are assumed to remain constant within that 60 second period. From this we can calculate the total amount of water/ice and therefore can estimate the total mass of sediment over the sampling period

ICE PIGGING

Utility Service Group

JOB RECORD/REPORT/SUMMARY

JOB INFORMATION:

Client	Western Springs Water Auth
Date	27-Jul-15
Location	2
Insertion Point	H
Discharge Point	R
Pipe Length	2379 Lft
Pipe Diameter	6 & 8
Material	DI
Usage	Domestic Water Distribution
Volume of Ice	1250 Gallons
Ice Fraction	90%
Total Water Used	11078 Gallons

ONSITE PROCEDURE:

Pre-Clean Readings		Immediate Post-Clean Readings		Change
Turbidity (NTU)	75.3	Turbidity (NTU)	40	-35.3
Temperature (°F)	64.9	Temperature (°F)	64.6	-0.3
Pressure (PSI)	20.1	Pressure (PSI)	43.5	23.4
Conductivity (mS/cm)	0.5	Conductivity (mS/cm)	0.5	0

Timeline:

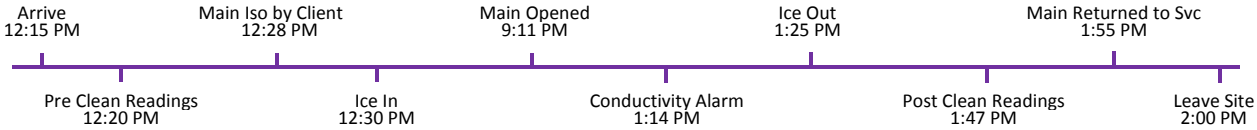

Comments:

Maximum Flow Rate (gpm)	268	Lowest Temperature Reached (°F)	38.8	Ambient Air Temperature (°F)	82

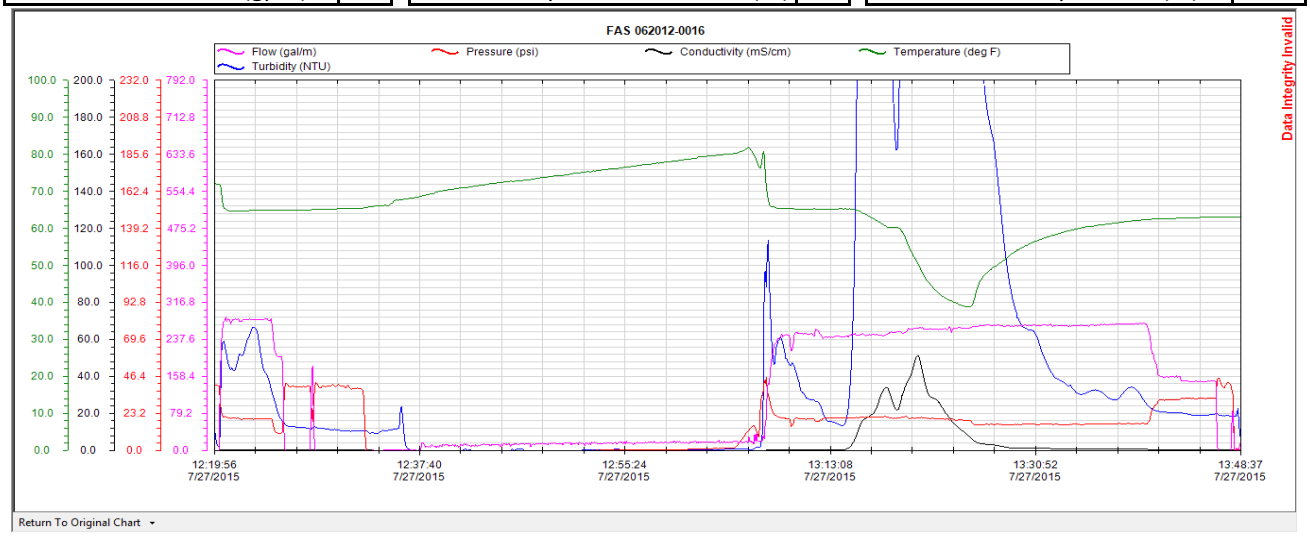

ICE PIGGING

Utility Service Group

JOB RECORD/REPORT/SUMMARY

SEDIMENT DATA:

#	Time (s)	Flow Rate (gal/m)	Temperature (°F)	Conductivity (mS/cm)	Sample Mass (g)	Sed. Mass (g/gal/m)	Sedmt (lb/gal/m)
1	60	246.63	65.2	3.0	0.05	98.65	0.217
2	120	247.52	64.2	15.0	0.16	316.82	0.697
3	180	247.68	62.3	22.8	0.28	554.80	1.221
4	240	249.47	60.5	31.0	0.58	1157.54	2.547
5	300	252.78	59.5	26.7	0.52	1051.55	2.313
6	360	260.13	53.5	43.2	0.52	1082.14	2.381
7	420	261.10	47.2	38.6	0.66	1378.61	3.033
8	480	259.78	43.0	26.5	0.70	1454.75	3.200
9	540	260.17	40.6	17.6	0.47	978.24	2.152
10	600	261.88	39.2	10.8	0.63	1319.86	2.904
11	660	265.02	41.7	5.3	0.54	1144.90	2.519
12	720	267.76	48.0	3.3	0.07	149.95	0.330
13	780	267.13	50.6	2.4	0.22	470.15	1.034
14	840	266.34	53.2	1.5	1.18	2514.24	5.531
15	900	267.17	55.0	1.3	1.11	2372.46	5.219
16	960	267.27	56.1	1.2	1.06	2266.42	4.986
17	1020	267.99	56.9	1.2	0.70	1500.76	3.302
18	1080	267.85	58.1	1.0	0.38	814.28	1.791
19	1140	266.65	59.0	0.9	0.12	255.99	0.563
20	1200	267.20	59.9	0.8	0.07	149.63	0.329
21	1260	267.09	60.5	0.7	0.48	1025.63	2.256
22	1320	268.89	61.0	0.6	0.06	129.07	0.284
23	1380	269.93	61.4	0.6	0.05	107.97	0.238
24	1440	270.69	61.9	0.6	0.04	86.62	0.191
25							
26							
27							
28							
29							
30							

RESULT:

Sediment Removed (lb)	**49.24**	**Sediment Removed per mile (lb)**	**109.47**

The above values are calculated from samples taken every 60 seconds on site. For each sample the flow rate, and the sediment densities are assumed to remain constant within that 60 second period. From this we can calculate the total amount of water/ice and therefore can estimate the total mass of sediment over the sampling period

ICE PIGGING

Utility Service Group

JOB RECORD/REPORT/SUMMARY

JOB INFORMATION:

Client	Western Springs Water Auth
Date	27-Jul-15
Location	3
Insertion Point	Q
Discharge Point	E
Pipe Length	4095 Lft
Pipe Diameter	6
Material	DI
Usage	Domestic Water Distribution
Volume of Ice	1200 Gallons
Ice Fraction	90%
Total Water Used	22806 Gallons

ONSITE PROCEDURE:

Pre-Clean Readings		Immediate Post-Clean Readings		Change
Turbidity (NTU)	237.8	Turbidity (NTU)	24	-213.8
Temperature (°F)	66.9	Temperature (°F)	61.5	-5.4
Pressure (PSI)	43.5	Pressure (PSI)	58	14.5
Conductivity (mS/cm)	0.5	Conductivity (mS/cm)	0.5	0

Timeline:

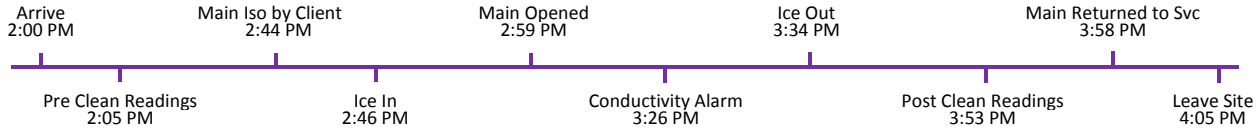

Comments:

Maximum Flow Rate (gpm)	205	Lowest Temperature Reached (°F)	52.0	Ambient Air Temperature (°F)	82

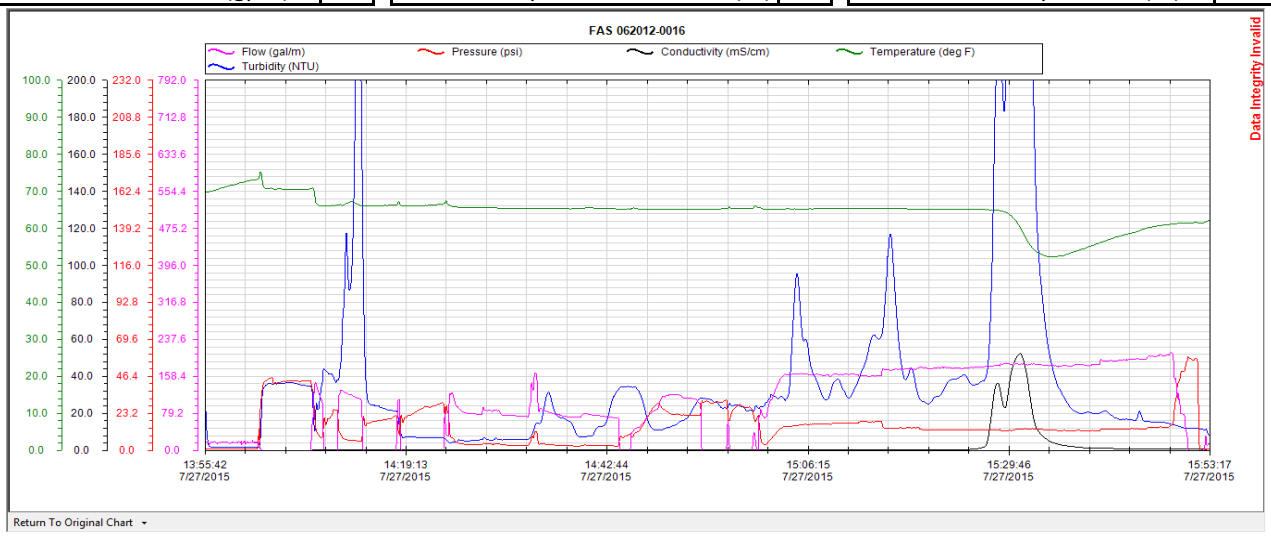

ICE PIGGING

Utility Service Group

JOB RECORD/REPORT/SUMMARY

SEDIMENT DATA:

#	Time (s)	Flow Rate (gal/m)	Temperature (°F)	Conductivity (mS/cm)	Sample Mass (g)	Sed. Mass (g/gal/m)	Sedmt (lb/gal/m)
1	60	179.07	65.1	2.0	0.06	85.95	0.189
2	120	180.73	65.0	21.8	0.20	289.17	0.636
3	180	183.73	64.7	29.5	0.25	367.46	0.808
4	240	184.68	63.5	38.7	0.27	398.92	0.878
5	300	185.04	60.3	50.8	0.25	370.08	0.814
6	360	184.18	56.0	32.3	0.33	486.25	1.070
7	420	183.82	53.4	10.9	0.10	147.06	0.324
8	480	181.76	52.5	5.8	0.10	145.41	0.320
9	540	180.46	52.4	3.6	0.08	115.50	0.254
10	600	181.37	52.9	2.5	0.07	101.57	0.223
11	660	182.70	53.7	1.9	0.08	116.93	0.257
12	720	183.12	54.6	1.5	0.07	102.54	0.226
13	780	183.25	55.5	1.3	0.06	87.96	0.194
14	840	190.06	56.4	1.2	0.06	91.23	0.201
15	900	191.69	57.2	1.1	0.06	92.01	0.202
16	960	192.03	57.7	1.0	0.06	92.18	0.203
17	1020	193.33	58.1	0.9	0.05	77.33	0.170
18	1080	195.22	58.8	0.8	0.04	62.47	0.137
19	1140	195.08	59.6	0.8	0.04	62.43	0.137
20	1200	200.58	60.2	0.7	0.04	64.18	0.141
21	1260	202.83	60.7	0.6	0.04	64.91	0.143
22	1320	205.43	61.1	0.6	0.05	82.17	0.181
23	1380	120.46	61.4	0.6	0.04	38.55	0.085
24	1440	31.62	61.5	0.6	0.04	10.12	0.022
25							
26							
27							
28							
29							
30							

RESULT:

Sediment Removed (lb)	**7.82**	**Sediment Removed per mile (lb)**	**10.09**

The above values are calculated from samples taken every 60 seconds on site. For each sample the flow rate, and the sediment densities are assumed to remain constant within that 60 second period. From this we can calculate the total amount of water/ice and therefore can estimate the total mass of sediment over the sampling period

ICE PIGGING

Utility Service Group

JOB RECORD/REPORT/SUMMARY

JOB INFORMATION:

Client	Western Springs Water Auth
Date	29-Jul-15
Location	5
Insertion Point	M
Discharge Point	P
Pipe Length	1333 Lft
Pipe Diameter	6 & 8
Material	DI
Usage	Domestic Water Distribution
Volume of Ice	700 Gallons
Ice Fraction	90%
Total Water Used	16901 Gallons

ONSITE PROCEDURE:

Pre-Clean Readings		Immediate Post-Clean Readings		Change
Turbidity (NTU)	85.4	Turbidity (NTU)	12.7	-72.7
Temperature (°F)	64.3	Temperature (°F)	62.9	-1.4
Pressure (PSI)	57.4	Pressure (PSI)	38.6	-18.8
Conductivity (mS/cm)	0.5	Conductivity (mS/cm)	0.7	0.2

Timeline:

- Arrive 3:15 PM
- Pre Clean Readings 3:30 PM
- Main Iso by Client 3:46 PM
- Ice In 3:48 PM
- Main Opened 4:01 PM
- Conductivity Alarm 4:24 PM
- Ice Out 4:42 PM
- Post Clean Readings 4:50 PM
- Main Returned to Svc 4:55 PM
- Leave Site 5:00 PM

Comments:

Maximum Flow Rate (gpm)	229	Lowest Temperature Reached (°F)	39.0	Ambient Air Temperature (°F)	82

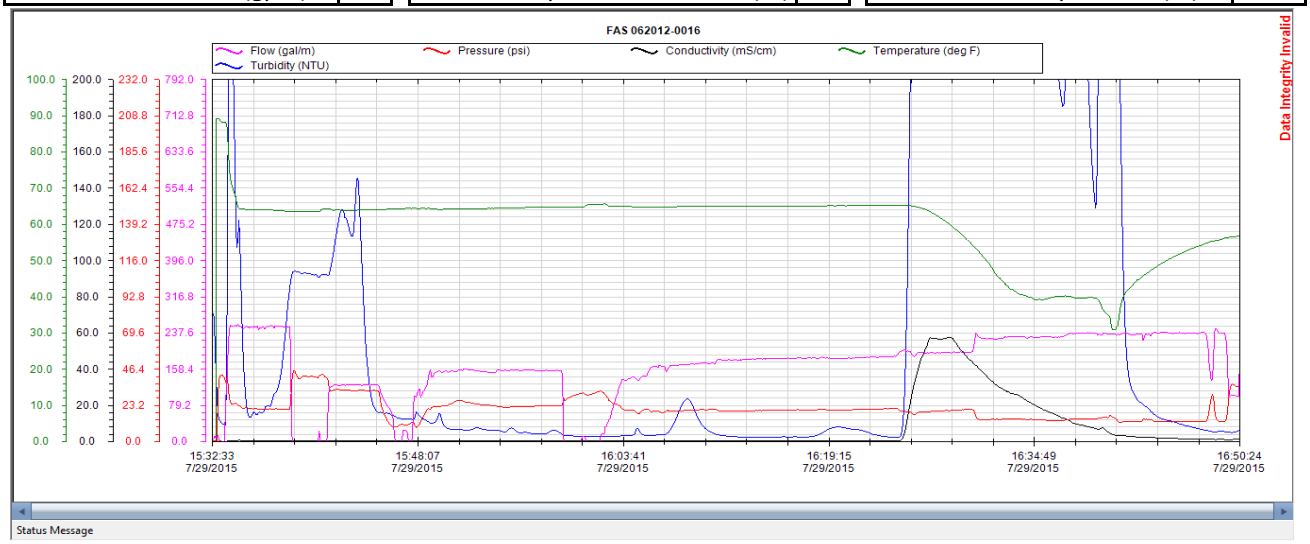

ICE PIGGING

Utility Service Group

JOB RECORD/REPORT/SUMMARY

SEDIMENT DATA:

#	Time (s)	Flow Rate (gal/m)	Temperature (°F)	Conductivity (mS/cm)	Sample Mass (g)	Sed. Mass (g/gal/m)	Sedmt (lb/gal/m)
1	60	194.32	65.2	2.5	0.14	217.64	0.479
2	120	193.07	64.9	31.2	0.32	494.26	1.087
3	180	194.40	63.6	53.9	0.55	855.36	1.882
4	240	194.75	61.3	57.0	0.65	1012.68	2.228
5	300	195.61	58.2	53.4	0.80	1251.89	2.754
6	360	207.66	54.6	44.4	0.81	1345.65	2.960
7	420	226.06	50.2	36.7	0.80	1446.79	3.183
8	480	225.79	45.1	30.0	0.63	1137.99	2.504
9	540	229.75	41.8	26.4	0.32	588.15	1.294
10	600	228.58	40.0	22.5	0.19	347.45	0.764
11	660	228.74	39.3	18.2	0.17	311.08	0.684
12	720	228.81	40.0	14.7	0.25	457.62	1.007
13	780						
14	840						
15	900						
16	960						
17	1020						
18	1080						
19	1140						
20	1200						
21	1260						
22	1320						
23	1380						
24	1440						
25							
26							
27							
28							
29							
30							

RESULT:

Sediment Removed (lb)	**20.83**	**Sediment Removed per mile (lb)**	**82.63**

The above values are calculated from samples taken every 60 seconds on site. For each sample the flow rate, and the sediment densities are assumed to remain constant within that 60 second period. From this we can calculate the total amount of water/ice and therefore can estimate the total mass of sediment over the sampling period

ICE PIGGING

Utility Service Group

JOB RECORD/REPORT/SUMMARY

JOB INFORMATION:

Client	Western Springs Water Auth
Date	29-Jul-15
Location	6
Insertion Point	G
Discharge Point	R
Pipe Length	3085 Lft
Pipe Diameter	6 & 8
Material	DI
Usage	Domestic Water Distribution
Volume of Ice	1600 Gallons
Ice Fraction	90%
Total Water Used	11435 Gallons

ONSITE PROCEDURE:

Pre-Clean Readings		Immediate Post-Clean Readings		Change
Turbidity (NTU)	153.9	Turbidity (NTU)	11.5	-142.4
Temperature (°F)	63.9	Temperature (°F)	55.8	-8.1
Pressure (PSI)	45.2	Pressure (PSI)	43.4	-1.8
Conductivity (mS/cm)	0.5	Conductivity (mS/cm)	0.7	0.2

Timeline:

- Arrive 5:02 PM
- Pre Clean Readings 5:05 PM
- Main Iso by Client 5:30 PM
- Ice In 5:31 PM
- Main Opened 5:36 PM
- Conductivity Alarm 5:46 PM
- Ice Out 5:50 PM
- Post Clean Readings 6:28 PM
- Main Returned to Svc 6:35 PM
- Leave Site 6:40 PM

Comments:

Maximum Flow Rate (gpm)	308	Lowest Temperature Reached (°F)	58.9	Ambient Air Temperature (°F)	83

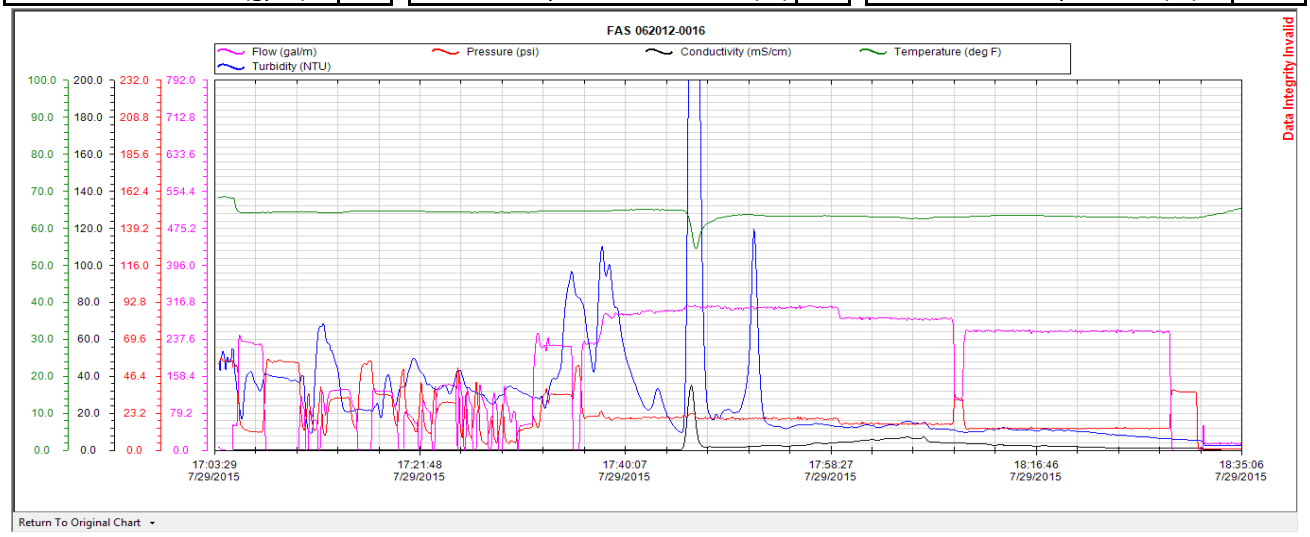

ICE PIGGING

Utility Service Group

JOB RECORD/REPORT/SUMMARY

SEDIMENT DATA:

#	Time (s)	Flow Rate (gal/m)	Temperature (°F)	Conductivity (mS/cm)	Sample Mass (g)	Sed. Mass (g/gal/m)	Sedmt (lb/gal/m)
1	60	301.06	64.9	1.8	0.13	313.10	0.689
2	120	308.80	58.9	23.3	0.31	765.82	1.685
3	180	307.19	60.1	2.5	0.78	1916.88	4.217
4	240	307.67	62.5	1.8	0.46	1132.22	2.491
5	300	303.78	63.3	1.7	0.85	2065.68	4.545
6	360	304.15	63.7	1.7	0.19	462.30	1.017
7	420	305.45	63.7	2.3	0.10	244.36	0.538
8	480	306.18	63.4	2.6	0.09	220.45	0.485
9	540	305.73	63.3	2.7	0.09	220.13	0.484
10	600	305.37	63.3	2.4	0.09	219.87	0.484
11	660	306.21	63.3	2.9	0.10	244.97	0.539
12	720	309.10	63.4	3.3	0.10	247.28	0.544
13	780						
14	840						
15	900						
16	960						
17	1020						
18	1080						
19	1140						
20	1200						
21	1260						
22	1320						
23	1380						
24	1440						
25							
26							
27							
28							
29							
30							

RESULT:

Sediment Removed (lb)	**17.72**	**Sediment Removed per mile (lb)**	**30.37**

The above values are calculated from samples taken every 60 seconds on site. For each sample the flow rate, and the sediment densities are assumed to remain constant within that 60 second period. From this we can calculate the total amount of water/ice and therefore can estimate the total mass of sediment over the sampling period

ICE PIGGING

Utility Service Group

JOB RECORD/REPORT/SUMMARY

JOB INFORMATION:

Client	Western Springs Water Auth
Date	3-Aug-15
Location	7
Insertion Point	L
Discharge Point	I
Pipe Length	771 Lft
Pipe Diameter	6
Material	DI
Usage	Domestic Water Distribution
Volume of Ice	250 Gallons
Ice Fraction	90%
Total Water Used	3294 Gallons

ONSITE PROCEDURE:

Pre-Clean Readings		Immediate Post-Clean Readings		Change
Turbidity (NTU)	43.2	Turbidity (NTU)	17.3	-25.9
Temperature (°F)	64.4	Temperature (°F)	62.1	-2.3
Pressure (PSI)	45.7	Pressure (PSI)	48.9	3.2
Conductivity (mS/cm)	0.6	Conductivity (mS/cm)	0.7	0.1

Timeline:

- Arrive 10:45 AM
- Pre Clean Readings 10:49 AM
- Main Iso by Client 11:07 AM
- Ice In 11:09 AM
- Main Opened 11:13 AM
- Conductivity Alarm 11:25 AM
- Ice Out 11:29 AM
- Post Clean Readings 11:36 AM
- Main Returned to Svc 11:40 AM
- Leave Site 11:42 AM

Comments:

Maximum Flow Rate (gpm)	215	Lowest Temperature Reached (°F)	33.1	Ambient Air Temperature (°F)	75

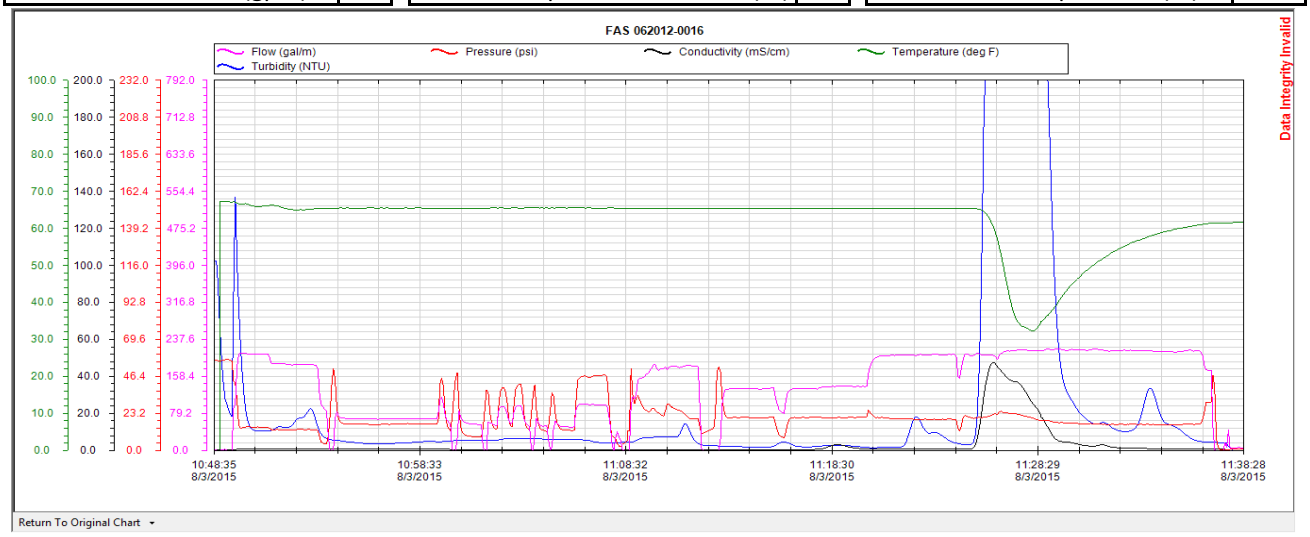

ICE PIGGING

Utility Service Group

JOB RECORD/REPORT/SUMMARY

SEDIMENT DATA:

#	Time (s)	Flow Rate (gal/m)	Temperature (°F)	Conductivity (mS/cm)	Sample Mass (g)	Sed. Mass (g/gal/m)	Sedmt (lb/gal/m)
1	60	194.16	65.4	0.8	0.13	201.93	0.444
2	120	204.70	63.3	30.0	0.31	507.66	1.117
3	180	210.35	44.6	39.9	0.46	774.10	1.703
4	240	214.54	33.1	27.8	0.40	686.52	1.510
5	300	215.95	37.8	10.3	0.32	552.84	1.216
6	360	215.22	45.2	3.8	0.28	482.10	1.061
7	420	215.25	50.5	2.6	0.27	464.93	1.023
8	480	213.68	54.3	1.6	0.25	427.37	0.940
9	540	213.48	57.0	1.1	0.26	444.03	0.977
10	600	211.82	58.9	0.9	0.27	457.54	1.007
11	660	212.59	60.3	0.7	0.26	442.19	0.973
12	720	135.68	61.3	0.7	0.31	336.48	0.740
13	780	8.19	61.5	0.3	0.24	15.73	0.035
14	840	4.45	61.6	0.1	0.22	7.83	0.017
15	900						
16	960						
17	1020						
18	1080						
19	1140						
20	1200						
21	1260						
22	1320						
23	1380						
24	1440						
25							
26							
27							
28							
29							
30							

RESULT:

Sediment Removed (lb)	**12.76**	**Sediment Removed per mile (lb)**	**87.55**

The above values are calculated from samples taken every 60 seconds on site. For each sample the flow rate, and the sediment densities are assumed to remain constant within that 60 second period. From this we can calculate the total amount of water/ice and therefore can estimate the total mass of sediment over the sampling period

ICE PIGGING

Utility Service Group

JOB RECORD/REPORT/SUMMARY

JOB INFORMATION:

Client	Western Springs Water Auth
Date	3-Aug-15
Location	8
Insertion Point	W
Discharge Point	K
Pipe Length	872 Lft
Pipe Diameter	6
Material	DI
Usage	Domestic Water Distribution
Volume of Ice	300 Gallons
Ice Fraction	90%
Total Water Used	3104 Gallons

ONSITE PROCEDURE:

Pre-Clean Readings		Immediate Post-Clean Readings		Change
Turbidity (NTU)	13	Turbidity (NTU)	20	7
Temperature (°F)	64.3	Temperature (°F)	60.6	-3.7
Pressure (PSI)	41.3	Pressure (PSI)	41.4	0.1
Conductivity (mS/cm)	0.5	Conductivity (mS/cm)	0.7	0.2

Timeline:

- Arrive 11:43 AM
- Pre Clean Readings 11:45 AM
- Main Iso by Client 12:27 PM
- Ice In 12:31 PM
- Main Opened 12:35 PM
- Conductivity Alarm 12:39 PM
- Ice Out 12:42 PM
- Post Clean Readings 12:47 PM
- Main Returned to Svc 12:50 PM
- Leave Site 12:52 PM

Comments:

Maximum Flow Rate (gpm)	75	Lowest Temperature Reached (°F)	39.3	Ambient Air Temperature (°F)	88

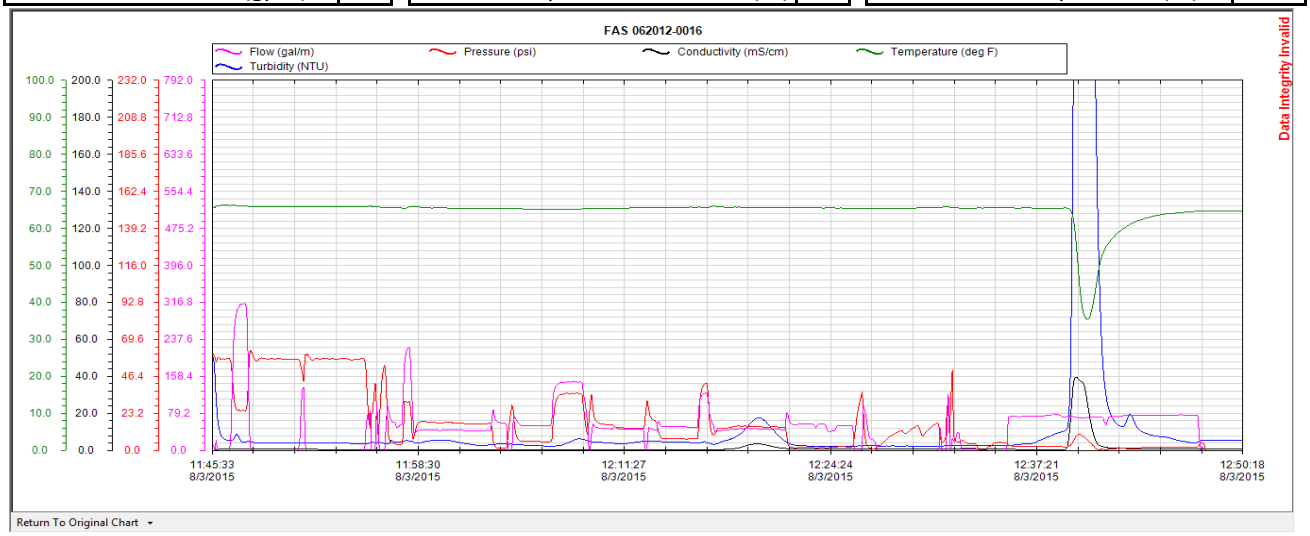

ICE PIGGING

Utility Service Group

JOB RECORD/REPORT/SUMMARY

SEDIMENT DATA:

#	Time (s)	Flow Rate (gal/m)	Temperature (°F)	Conductivity (mS/cm)	Sample Mass (g)	Sed. Mass (g/gal/m)	Sedmt (lb/gal/m)
1	60	73.40	65.5	0.5	0.17	99.82	0.220
2	120	75.71	65.5	0.5	0.27	163.53	0.360
3	180	71.85	58.5	24.6	0.57	327.62	0.721
4	240	70.58	39.3	18.5	0.79	446.05	0.981
5	300	68.85	55.1	1.7	1.36	749.13	1.648
6	360	73.95	60.1	1.1	1.17	692.21	1.523
7	420	74.88	62.4	1.0	0.53	317.51	0.699
8	480	75.24	63.6	0.9	0.73	439.39	0.967
9	540	75.66	64.2	0.8	0.27	163.43	0.360
10	600	66.72	64.5	0.8	0.16	85.41	0.188
11	660	0.30	64.7	0.7	0.15	0.36	0.001
12	720	0.30	64.7	0.7	0.12	0.29	0.001
13	780						
14	840						
15	900						
16	960						
17	1020						
18	1080						
19	1140						
20	1200						
21	1260						
22	1320						
23	1380						
24	1440						
25							
26							
27							
28							
29							
30							

RESULT:

Sediment Removed (lb)	**7.67**	**Sediment Removed per mile (lb)**	**46.50**

The above values are calculated from samples taken every 60 seconds on site. For each sample the flow rate, and the sediment densities are assumed to remain constant within that 60 second period. From this we can calculate the total amount of water/ice and therefore can estimate the total mass of sediment over the sampling period

ICE PIGGING

Utility Service Group

JOB RECORD/REPORT/SUMMARY

JOB INFORMATION:

Client	Western Springs Water Auth
Date	3-Aug-15
Location	9
Insertion Point	A
Discharge Point	B
Pipe Length	2000 Lft
Pipe Diameter	6
Material	DI
Usage	Domestic Water Distribution
Volume of Ice	600 Gallons
Ice Fraction	90%
Total Water Used	6215 Gallons

ONSITE PROCEDURE:

Pre-Clean Readings		Immediate Post-Clean Readings		Change
Turbidity (NTU)	21.6	Turbidity (NTU)	9	-12.6
Temperature (°F)	66.3	Temperature (°F)	61.4	-4.9
Pressure (PSI)	56	Pressure (PSI)	57.2	1.2
Conductivity (mS/cm)	0.6	Conductivity (mS/cm)	0.7	0.1

Timeline:

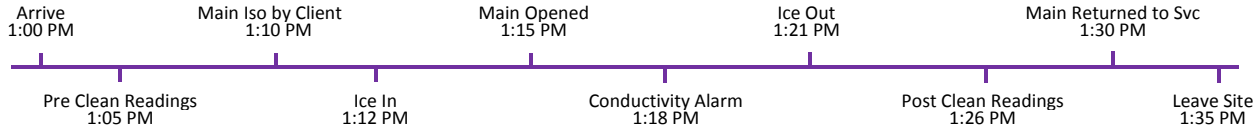

Comments:

Maximum Flow Rate (gpm)	288	Lowest Temperature Reached (°F)	27.8	Ambient Air Temperature (°F)	82

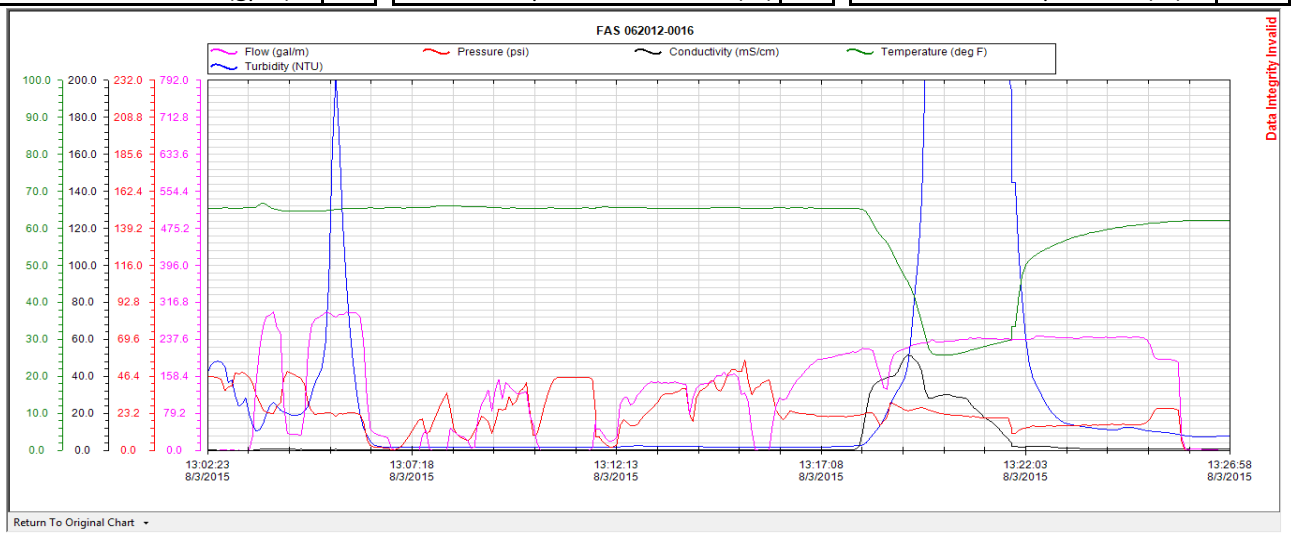

ICE PIGGING

Utility Service Group

JOB RECORD/REPORT/SUMMARY

SEDIMENT DATA:

#	Time (s)	Flow Rate (gal/m)	Temperature (°F)	Conductivity (mS/cm)	Sample Mass (g)	Sed. Mass (g/gal/m)	Sedmt (lb/gal/m)
1	60	206.93	65.3	3.0	0.05	82.77	0.182
2	120	193.75	53.7	41.5	2.05	3177.44	6.990
3	180	232.25	29.2	33.5	1.75	3251.55	7.153
4	240	238.78	27.8	20.2	1.07	2043.93	4.497
5	300	239.22	43.0	3.0	0.57	1090.82	2.400
6	360	241.61	56.8	1.4	0.29	560.53	1.233
7	420	242.05	59.9	0.9	0.21	406.65	0.895
8	480	249.80	61.5	0.7	0.15	299.76	0.659
9	540	249.30	62.1	0.7	0.13	259.27	0.570
10	600	258.20	62.1	0.7	0.12	247.87	0.545
11	660	249.00	62.2	0.7	0.12	239.04	0.526
12	720	236.80	62.2	0.7	0.11	208.38	0.458
13	780	229.00	62.4	0.7	0.18	329.76	0.725
14	840	261.60	62.5	0.7	0.15	313.92	0.691
15	900	288.00	62.5	0.7	0.28	645.12	1.419
16	960	260.10	62.5	0.7	0.25	520.20	1.144
17	1020	253.50	62.6	0.7	0.21	425.88	0.937
18	1080	239.00	62.6	0.7	0.19	363.28	0.799
19	1140	232.20	62.6	0.6	0.13	241.49	0.531
20	1200	212.00	62.7	0.6	0.11	186.56	0.410
21	1260	209.00	62.8	0.6	0.12	200.64	0.441
22	1320	211.00	62.7	0.6	0.13	219.44	0.483
23	1380	211.00	62.9	0.6	0.13	219.44	0.483
24	1440						
25							
26							
27							
28							
29							
30							

RESULT:

Sediment Removed (lb)	**34.17**	**Sediment Removed per mile (lb)**	**90.37**

The above values are calculated from samples taken every 60 seconds on site. For each sample the flow rate, and the sediment densities are assumed to remain constant within that 60 second period. From this we can calculate the total amount of water/ice and therefore can estimate the total mass of sediment over the sampling period

RIDGEWOOD SUBDIVISION UTILITY STUDY

Village of Western Springs
Illinois

RIDGEWOOD DRIVE: ALTERNATE 1A

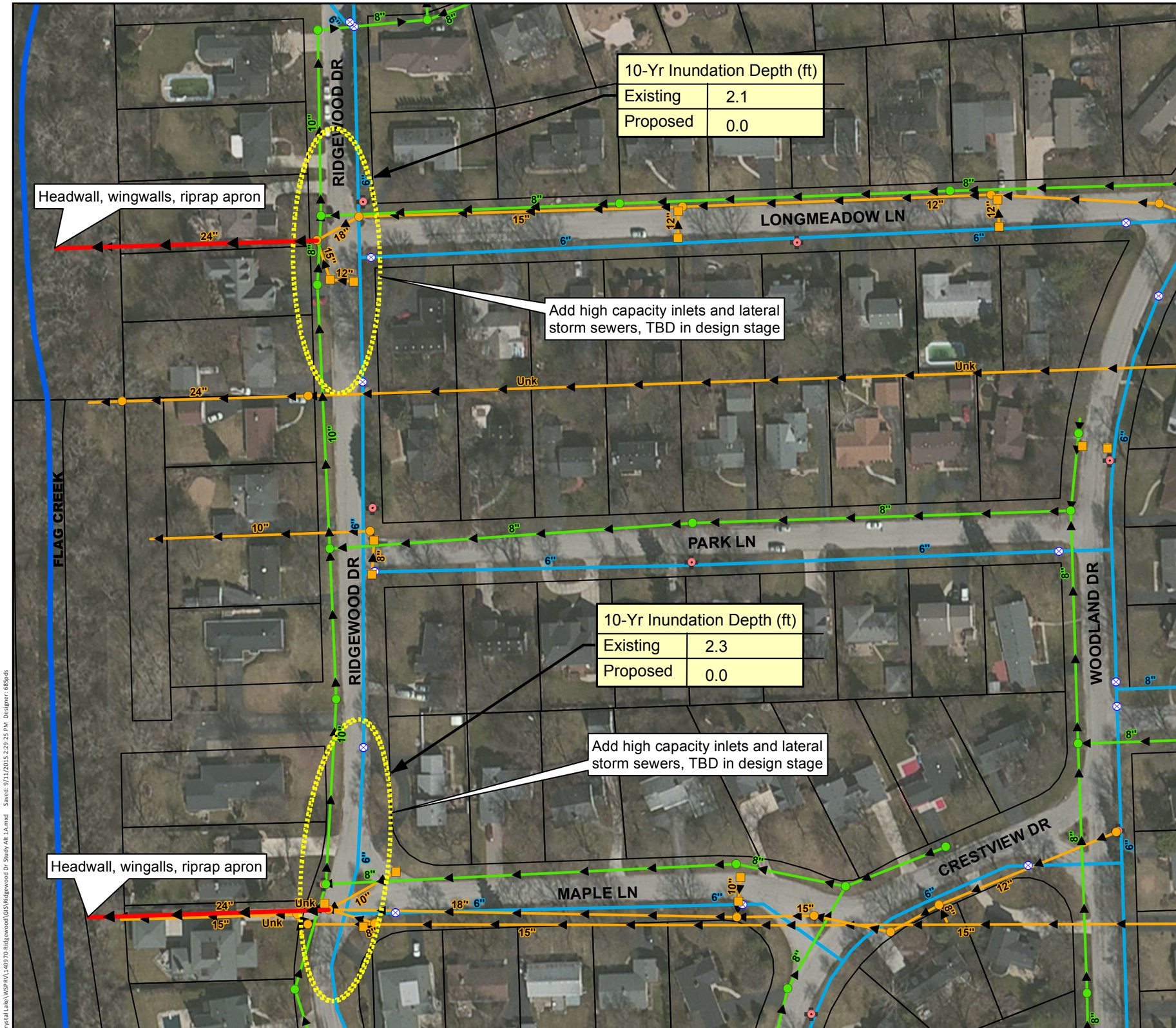

Existing

- Inlets
- Sanitary Manholes
- Storm Manholes
- Hydrants
- Valves
- Sanitary Sewers
- Storm Sewers
- Water Mains

- Proposed Sewers
- Existing Problem Area

Engineer's Opinion of Probable Cost - $1,710,000

Exhibit 1

N

1 " = 100 '

0 50 100 200 Feet

BAXTER & WOODMAN
Consulting Engineers

Service Layer Credits: Source: Esri, DigitalGlobe, GeoEye, i-cubed, Earthstar Geographics, CNES/Airbus DS, USDA, USGS, AEX, Getmapping, Aerogrid, IGN, IGP,

I:\Crystal Lake\WSPRV\140970-Ridgewood\GIS\Ridgewood Dr Study Alt 1A.mxd Saved: 9/11/2015 2:29:25 PM Designer: 685pds

RIDGEWOOD SUBDIVISION UTILITY STUDY

Village of Western Springs
Illinois

RIDGEWOOD DRIVE: ALTERNATE 1B

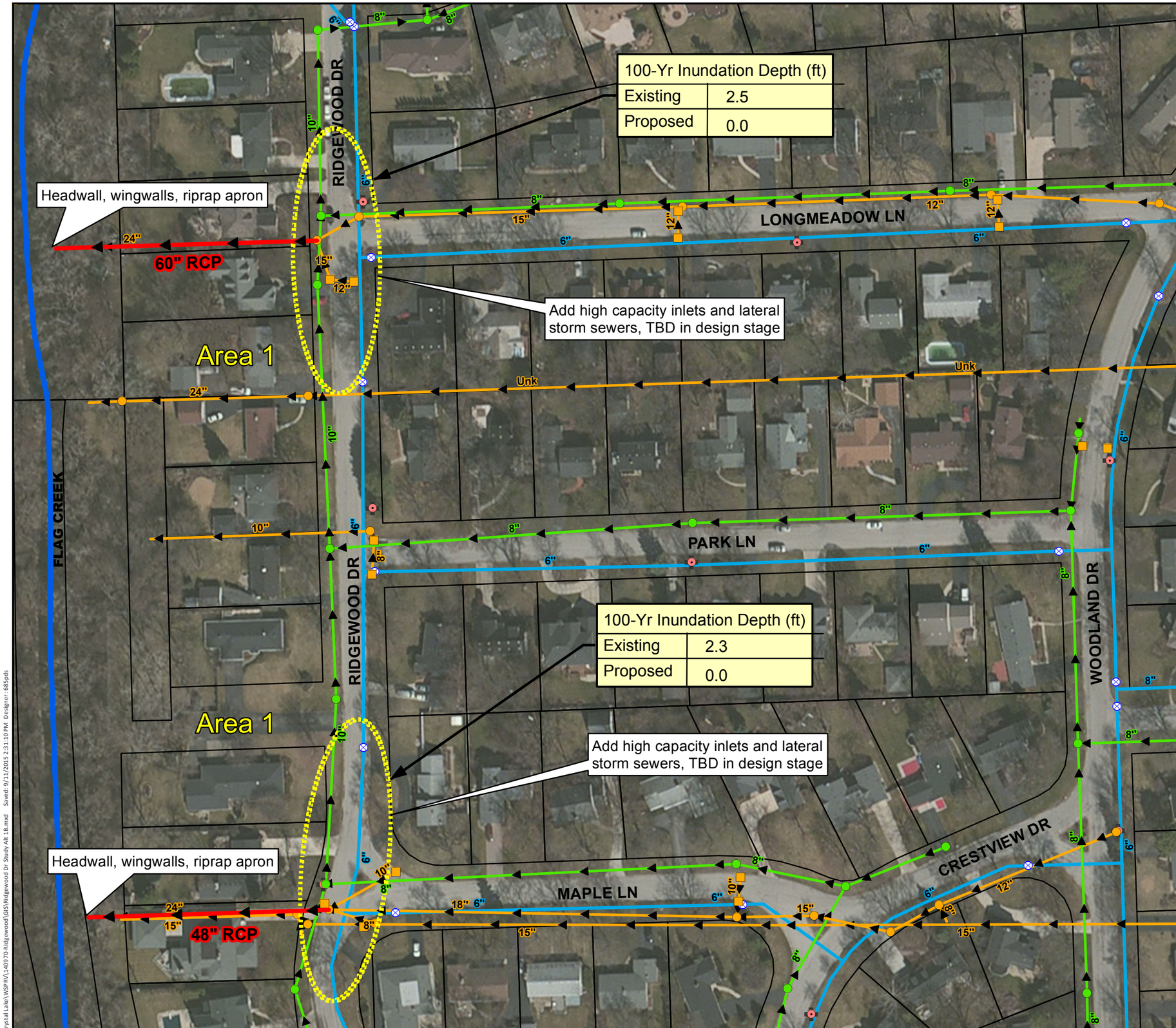

Existing

- Inlets
- Sanitary Manholes
- Storm Manholes
- Hydrants
- Valves
- Sanitary Sewers
- Storm Sewers
- Water Mains

- Proposed Sewers
- Existing Problem Area

Engineer's Opinion of Probable Cost - $2,320,000

Exhibit 2

N

1 " = 100 '

0 50 100 200 Feet

BAXTER & WOODMAN
Consulting Engineers

Service Layer Credits: Source: Esri, DigitalGlobe, GeoEye, i-cubed, Earthstar Geographics, CNES/Airbus DS, USDA, USGS, AEX, Getmapping, Aerogrid, IGN, IGP,

I:\Crystal Lake\WSPRV\140970-Ridgewood\GIS\Ridgewood Dr Study Alt 1B.mxd Saved: 9/11/2015 2:31:10 PM Designer: 685pds

RIDGEWOOD SUBDIVISION UTILITY STUDY

Village of Western Springs
Illinois

HERITAGE ESTATES DETENTION BASIN OVERFLOW: ALTERNATE 1

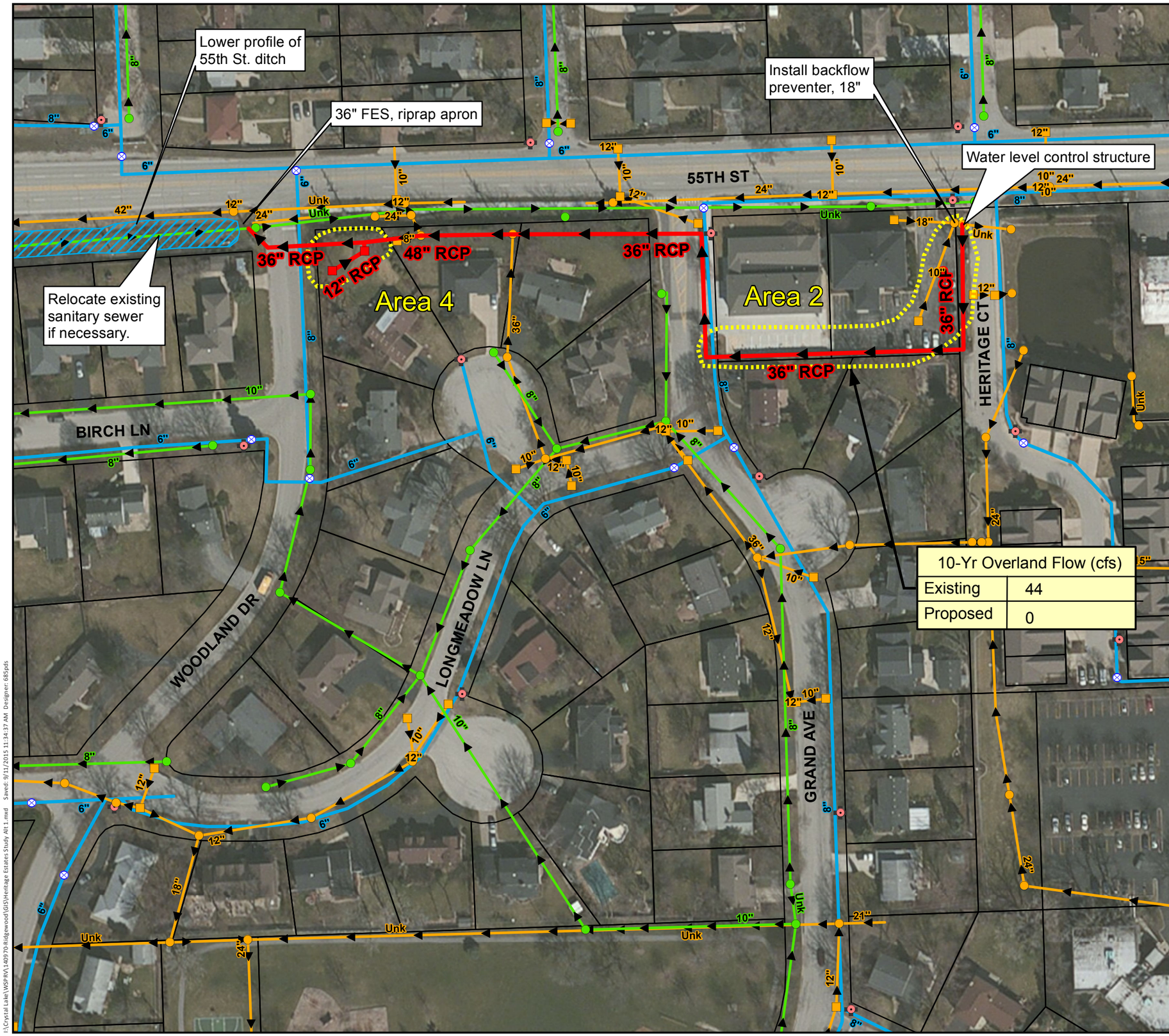

Existing

- Inlets
- Sanitary Manholes
- Storm Manholes
- Hydrants
- Valves
- Sanitary Sewers
- Storm Sewers
- Water Mains

- Proposed Sewers
- Proposed Sturctures
- Existing Problem Area

Engineer's Opinion of Probable Cost - $1,690,000

Exhibit 3

N

1 " = 100 '

0 50 100 200 Feet

BAXTER & WOODMAN
Consulting Engineers

Service Layer Credits: Source: Esri, DigitalGlobe, GeoEye, i-cubed, Earthstar Geographics, CNES/Airbus DS, USDA, USGS, AEX, Getmapping, Aerogrid, IGN, IGP, swisstopo, and the GIS User Community

I:\Crystal Lake\WSPRV\140970-Ridgewood\GIS\Heritage Estates Study Alt 1.mxd Saved: 9/11/2015 11:34:37 AM Designer: 685pds

RIDGEWOOD SUBDIVISION UTILITY STUDY

Village of Western Springs
Illinois

HERITAGE ESTATES DETENTION BASIN OVERFLOW: ALTERNATE 2A

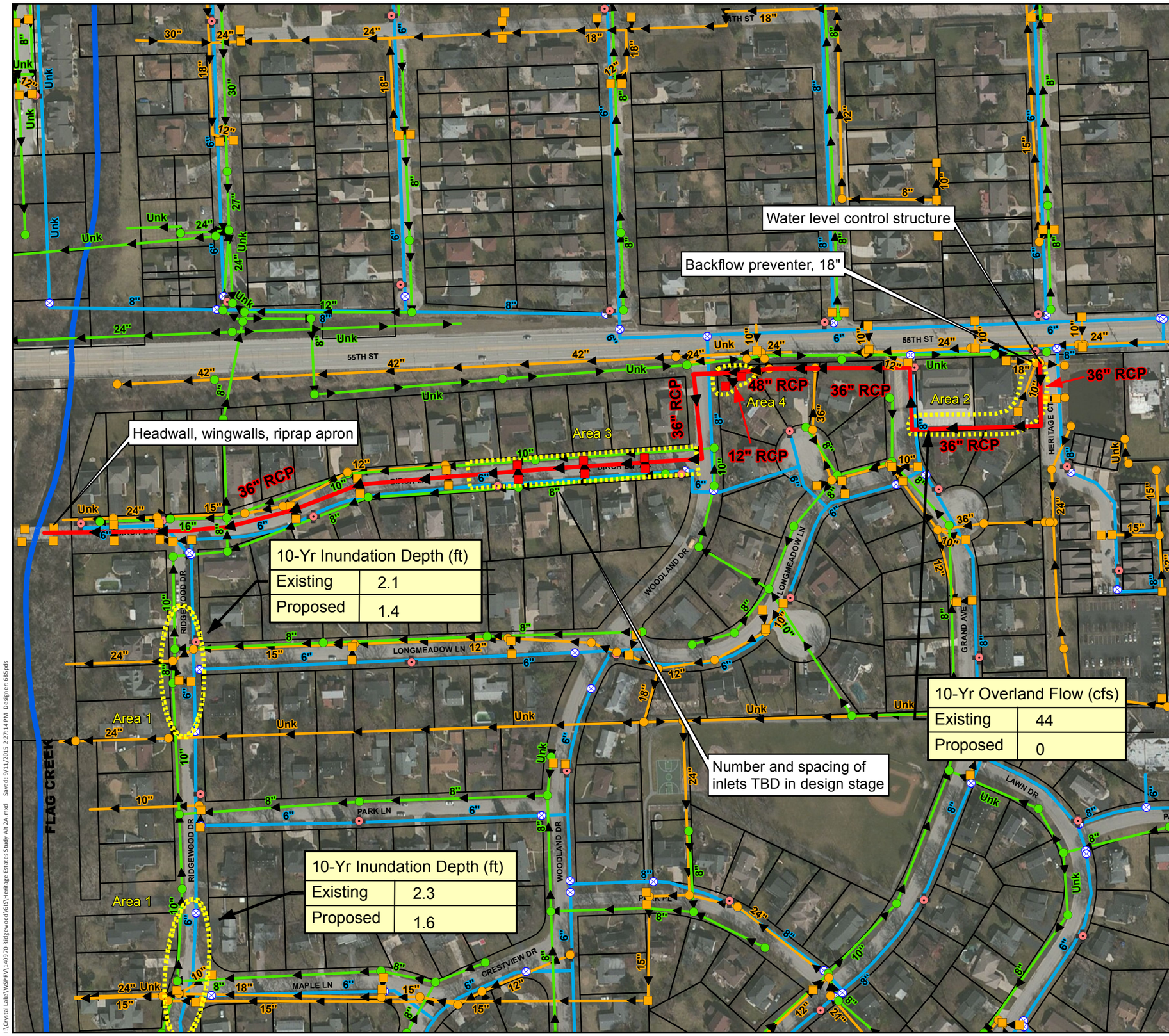

Existing

- Inlets
- Sanitary Manholes
- Storm Manholes
- Hydrants
- Valves
- Sanitary Sewers
- Storm Sewers
- Water Mains
- Proposed Sewers
- Proposed Structure
- Existing Problem Area

Engineer's Opinion of Probable Cost - $2,620,000

Exhibit 4

N

1 " = 200 '

0 100 200 400 Feet

BAXTER & WOODMAN
Consulting Engineers

Service Layer Credits: Source: Esri, DigitalGlobe, GeoEye, i-cubed, Earthstar Geographics, CNES/Airbus DS, USDA, USGS, AEX, Getmapping, Aerogrid, IGN, IGP, swisstopo, and the GIS User Community

I:\Crystal Lake\WSPRV\140970-Ridgewood\GIS\Heritage Estates Study Alt 2A.mxd Saved: 9/11/2015 2:27:14 PM Designer: 685pds

RIDGEWOOD SUBDIVISION UTILITY STUDY

Village of Western Springs
Illinois

HERITAGE ESTATES DETENTION BASIN OVERFLOW: ALTERNATE 2B

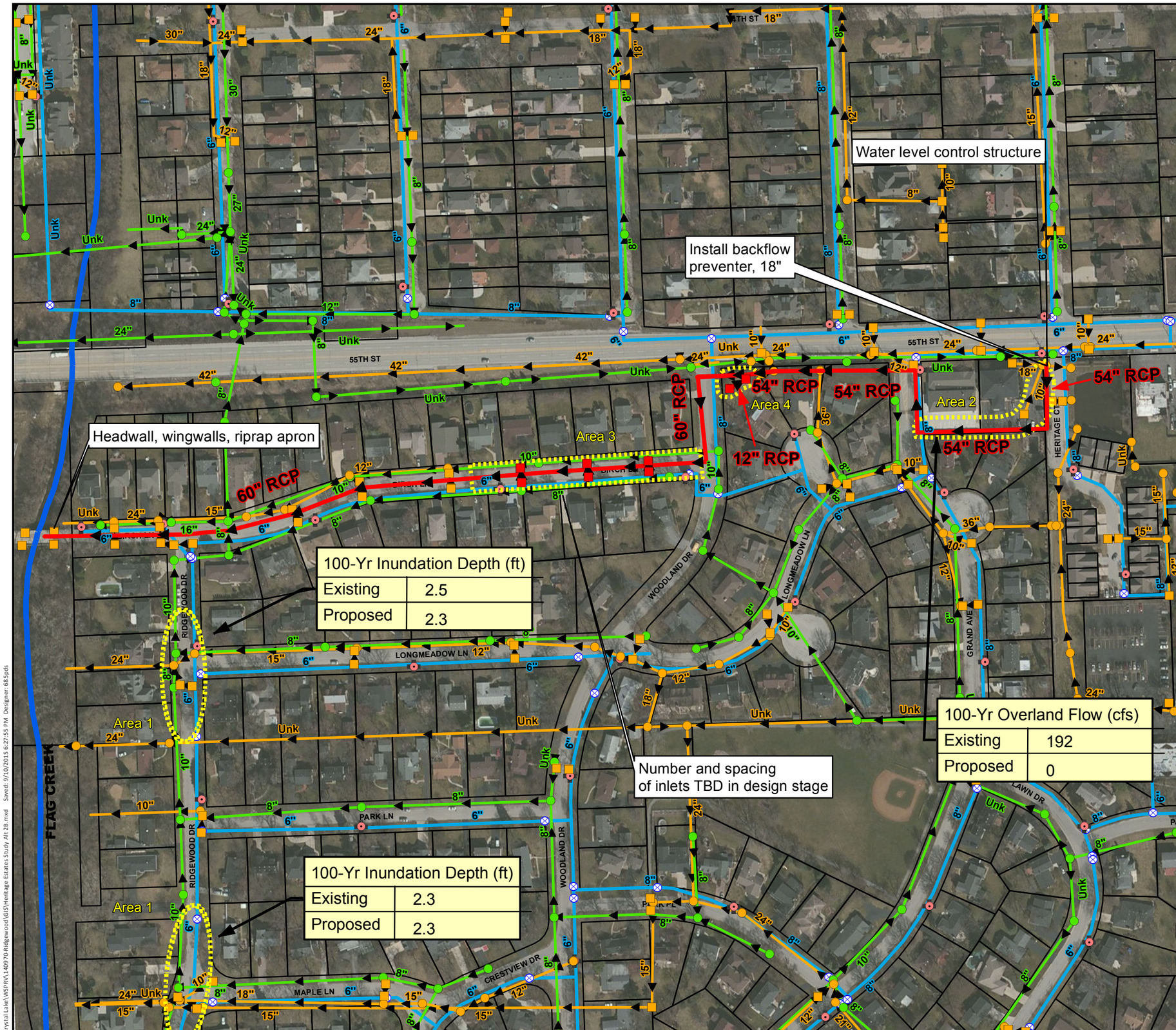

Existing

- Inlets
- Sanitary Manholes
- Storm Manholes
- Hydrants
- Valves
- Sanitary Sewers
- Storm Sewers
- Water Mains
- Proposed Sewers
- Proposed Structures
- Existing Problem Area

Engineer's Opinion of Probable Cost - $3,480,000

Exhibit 5

N

1 " = 200 '

0 100 200 400 Feet

BAXTER & WOODMAN
Consulting Engineers

Service Layer Credits: Source: Esri, DigitalGlobe, GeoEye, i-cubed, Earthstar Geographics, CNES/Airbus DS, USDA, USGS, AEX, Getmapping, Aerogrid, IGN, IGP,

I:\Crystal Lake\WSP\RV\140970-Ridgewood\GIS\Heritage Estates Study Alt 2B.mxd Saved: 9/10/2015 6:27:55 PM Designer: 685pds

RIDGEWOOD SUBDIVISION UTILITY STUDY

Village of Western Springs
Illinois

BIRCH LANE

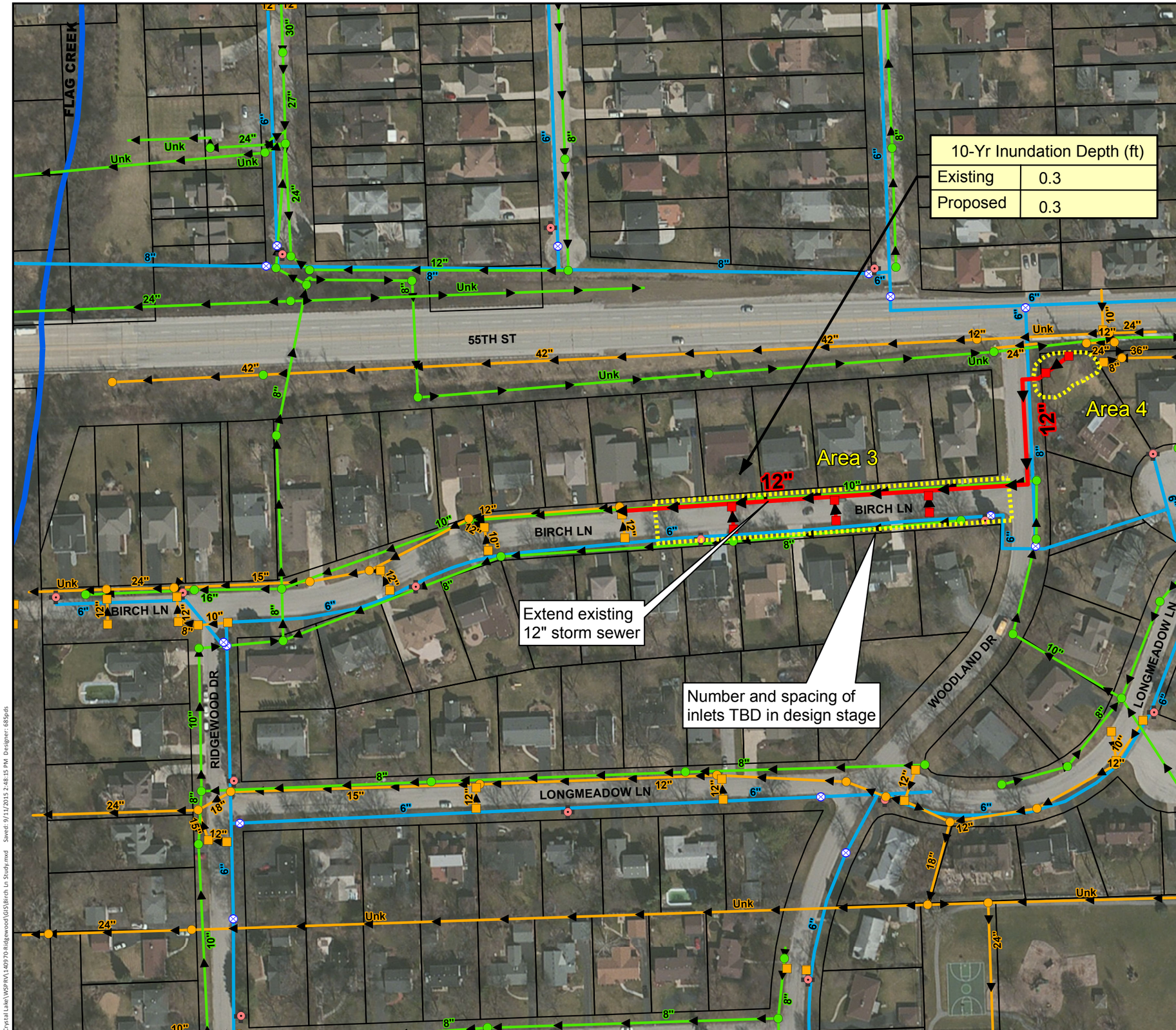

10-Yr Inundation Depth (ft)	
Existing	0.3
Proposed	0.3

Existing

- Inlets
- Sanitary Manholes
- Storm Manholes
- Hydrants
- Valves
- Sanitary Sewers
- Storm Sewers
- Water Mains
- Proposed Sewer
- Proposed Structure
- Existing Problem Area

Engineer's Opinion of Probable Cost - $780,000

Exhibit 6

N

1 " = 130 '

0 65 130 260 Feet

BAXTER & WOODMAN
Consulting Engineers

Service Layer Credits: Source: Esri, DigitalGlobe, GeoEye, i-cubed, Earthstar Geographics, CNES/Airbus DS, USDA, USGS, AEX, Getmapping, Aerogrid, IGN, IGP, swisstopo, and the GIS User Community

I:\Crystal Lake\WSPRV\140970-Ridgewood\GIS\Birch Ln Study.mxd Saved: 9/11/2015 2:48:15 PM Designer: 685pds

RIDGEWOOD SUBDIVISION UTILITY STUDY

Village of Western Springs
Illinois

COMBINATION

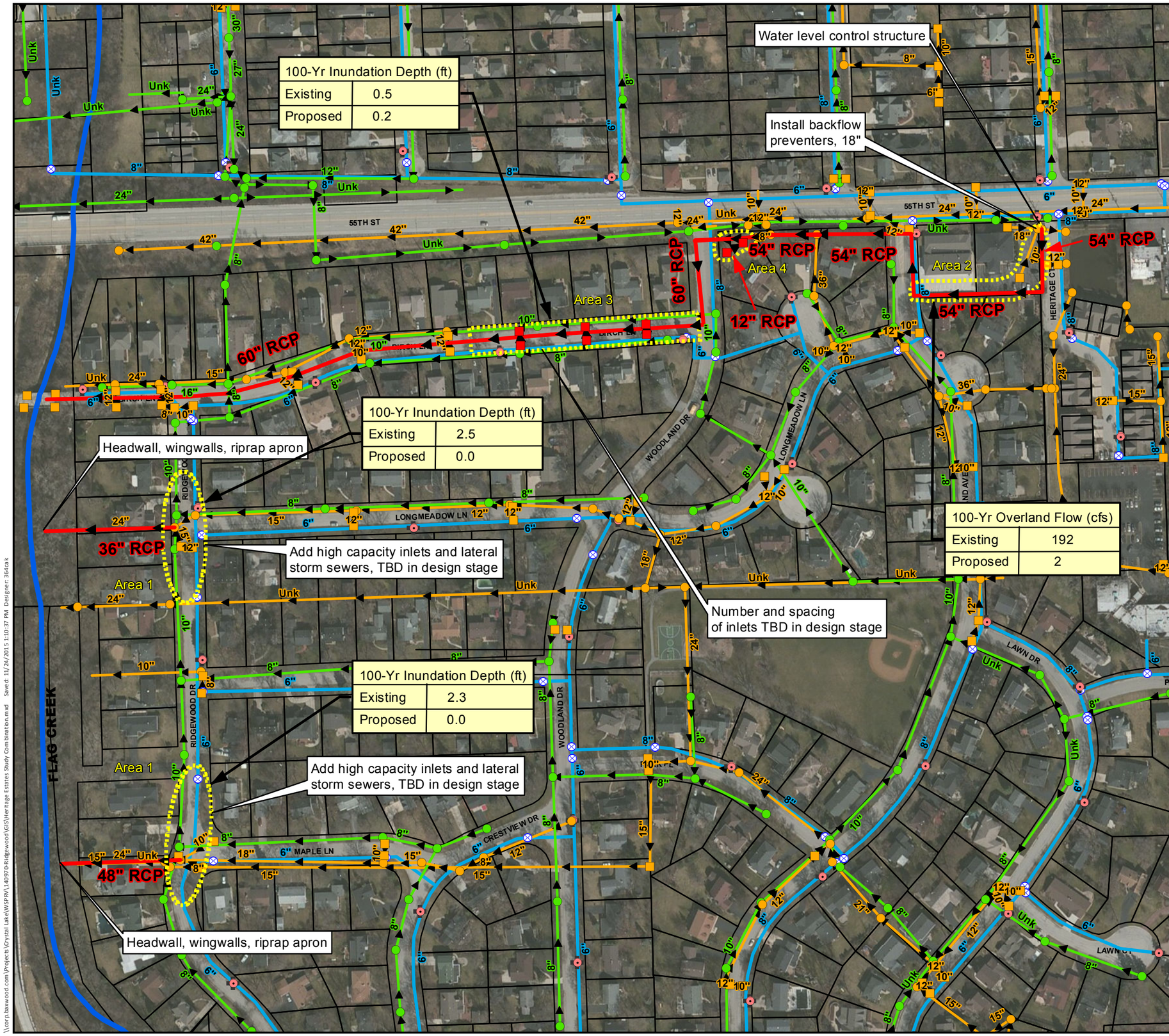

Existing

- Inlets
- Sanitary Manholes
- Storm Manholes
- Hydrants
- Valves
- Sanitary Sewers
- Storm Sewers
- Water Mains

- Proposed Sewers
- Existing Problem Area

Engineer's Opinion of Probable Cost - $2,320,000

Exhibit 6a

N

1 " = 200 '

0 100 200 400 Feet

BAXTER & WOODMAN
Consulting Engineers

Service Layer Credits: Source: Esri, DigitalGlobe, GeoEye, i-cubed, USDA, USGS, AEX, Getmapping, Aerogrid, IGN, IGP, swisstopo, and the GIS User Community

\\corp.baxwood.com\Projects\Crystal Lake\WSPR\140970-Ridgewood\GIS\Heritage Estates Study Combination.mxd Saved: 11/24/2015 1:10:37 PM Designer: 364cak

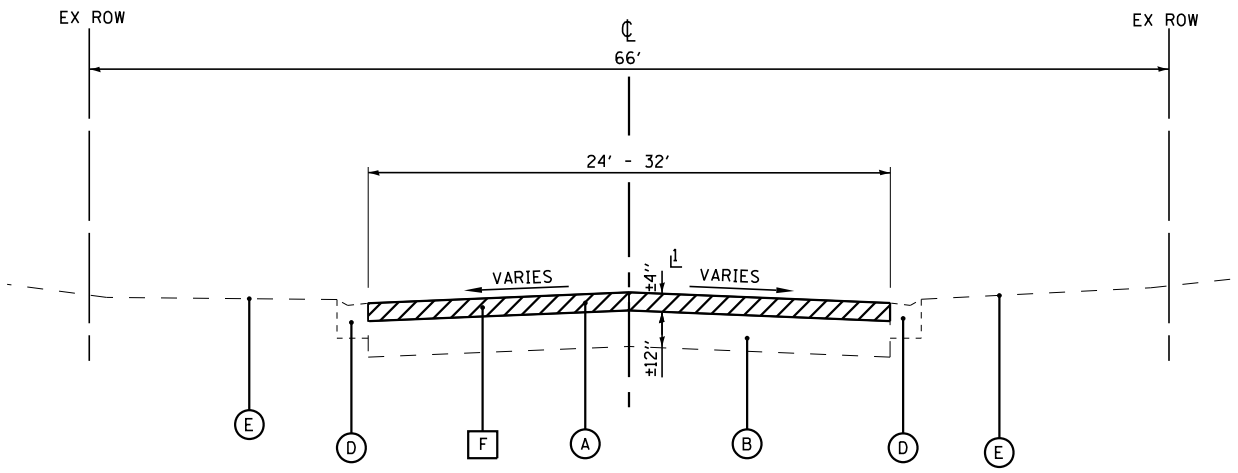

1 REMOVE SOME AGGREGATE BASE IF HMA < 4''.

EXISTING TYPICAL SECTION
(NOT TO SCALE)

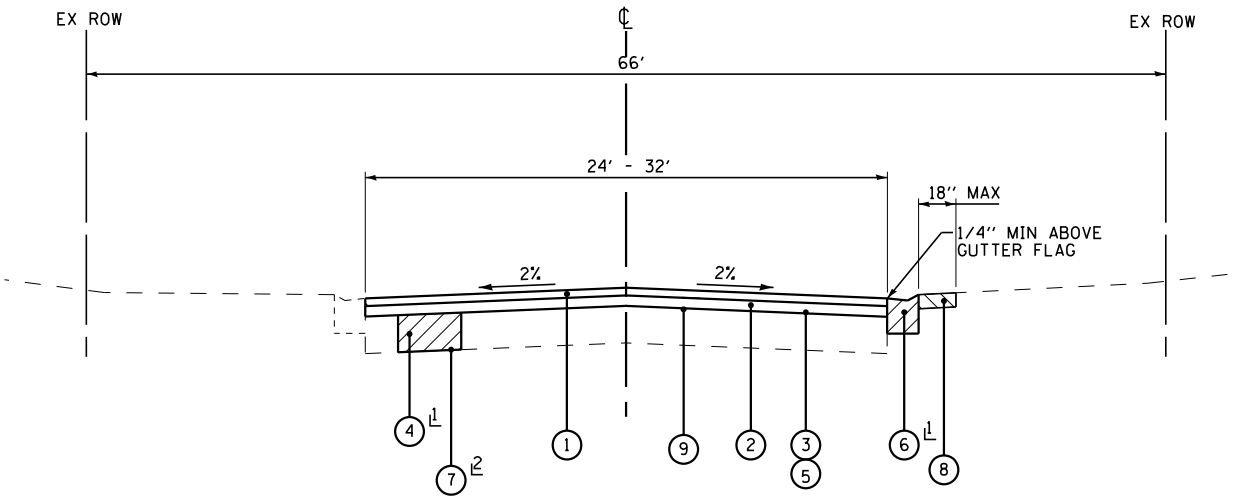

PROPOSED TYPICAL SECTION
(NOT TO SCALE)

1 AS DETERMINED BY THE ENGINEER
2 ONLY USED FOR FULL WIDTH PATCHES, AS DETERMINED BY ENGINEER

EXISTING LEGEND

- (A) EXISTING HOT-MIX ASPHALT PAVEMENT
- (B) EXISITNG AGGREGATE BASE COURSE
- (C) EXISTING SIDEWALK
- (D) EXISTING CONCRETE CURB AND GUTTER
- (E) GROUND SURFACE
- [F] HOT-MIX ASPHALT SURFACE REMOVAL, 4''
- REMOVAL ITEM

PROPOSED LEGEND

- (1) HOT-MIX ASPHALT SURFACE COURSE, MIX "D", N50 - 2''
- (2) HOT-MIX ASPHALT BINDER COURSE, IL-19.0, N50 - 2 1/2''
- (3) PREPARATION OF BASE
- (4) AGGREGATE BASE COURSE REMOVAL AND REPLACEMENT 12''
- (5) AGGREGATE BASE COURSE, ± 1/2''
- (6) COMBINATION CONCRETE CURB AND GUTTER REMOVAL AND REPLACEMENT
- (7) GEOTECHNICAL FABRIC FOR GROUND STABILIZATION
- (8) PARKWAY RESTORATION
- (9) BITUMINOUS MATERIALS (PRIME COAT) MC-30

EXHIBIT 7

BAXTER & WOODMAN Consulting Engineers

FULL DEPTH HMA REMOVAL AND REPLACEMENT
RIDGEWOOD SUBDIVISION

VILLAGE of WESTERN SPRINGS
COOK COUNTY, ILLINOIS

I:\Crystal Lake\WSPRV\140970-Ridgewood\CADD\140970SHT-TypSec.dgn
9/4/2015

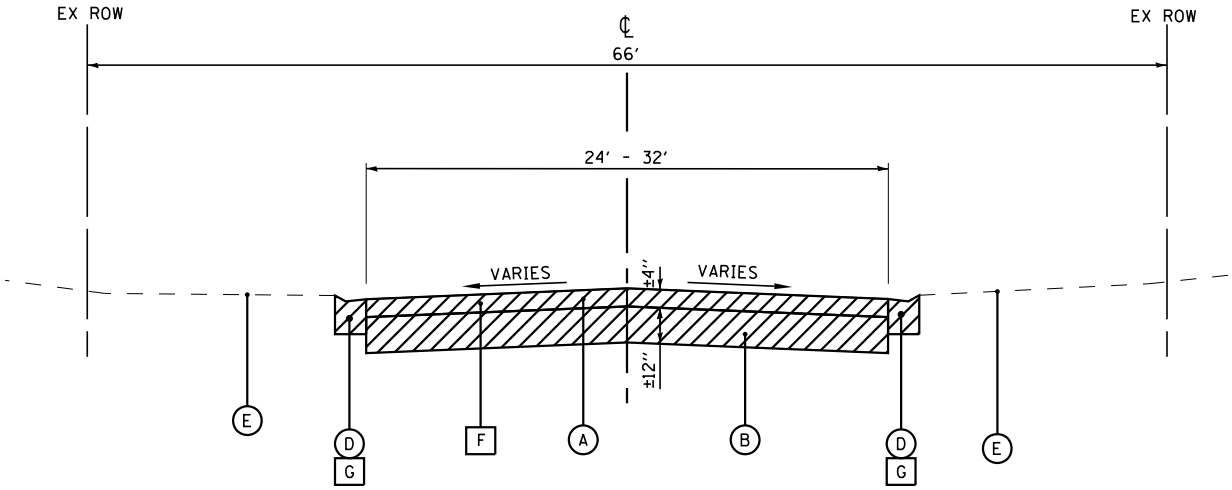

EXISTING TYPICAL SECTION
(NOT TO SCALE)

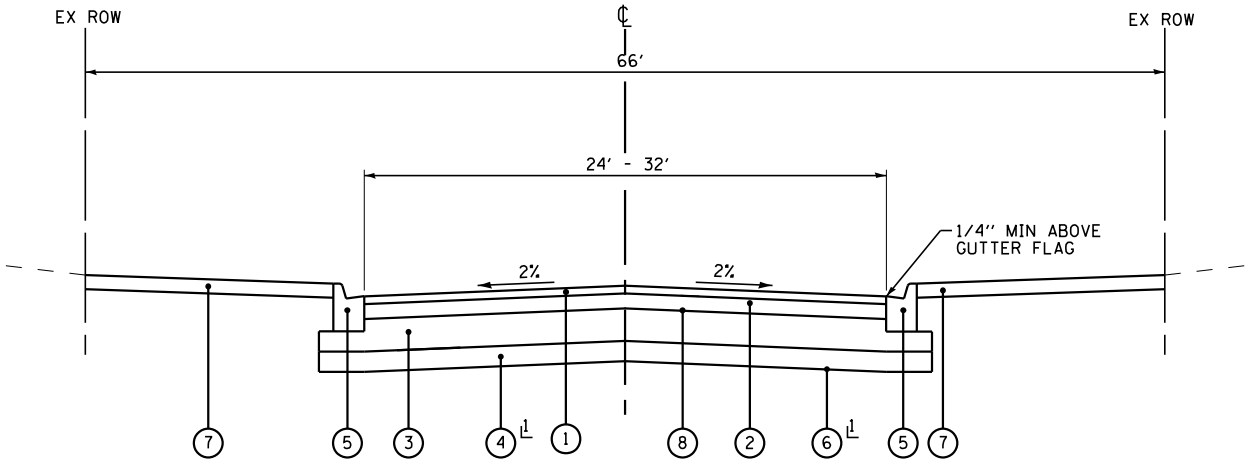

PROPOSED TYPICAL SECTION
(NOT TO SCALE)

1 ONLY USED IN UNDERCUT AREAS, AS DETERMINED BY ENGINEER

EXISTING LEGEND

- (A) EXISTING HOT-MIX ASPHALT PAVEMENT
- (B) EXISITNG AGGREGATE BASE COURSE
- (C) EXISTING SIDEWALK
- (D) EXISTING CONCRETE CURB AND GUTTER
- (E) GROUND SURFACE
- [F] HOT-MIX ASPHALT PAVEMENT AND BASE COURSE REMOVAL
- [G] CONCRETE CURB AND GUTTER REMOVAL
- REMOVAL ITEM

PROPOSED LEGEND

- (1) HOT-MIX ASPHALT SURFACE COURSE, MIX "D", N50 - 2"
- (2) HOT-MIX ASPHALT BINDER COURSE, IL-19.0, N50 - 4"
- (3) AGGREGATE BASE COURSE TYPE B 12"
- (4) SUBGRADE REMOVAL AND REPLACEMENT
- (5) COMBINATION CONCRETE CURB AND GUTTER TYPE B-6.12
- (6) GEOTECHNICAL FABRIC FOR GROUND STABILIZATION
- (7) PARKWAY RESTORATION
- (8) BITUMINOUS MATERIALS (PRIME COAT) MC-30

EXHIBIT 8

BAXTER & WOODMAN Consulting Engineers

HMA PAVEMENT RECONSTRUCTION
RIDGEWOOD SUBDIVISION

VILLAGE of WESTERN SPRINGS
COOK COUNTY, ILLINOIS

I:\Crystal Lake\WSPRV\140970-Ridgewood\CADD\140970SHT-TypSec.dgn
9/4/2015

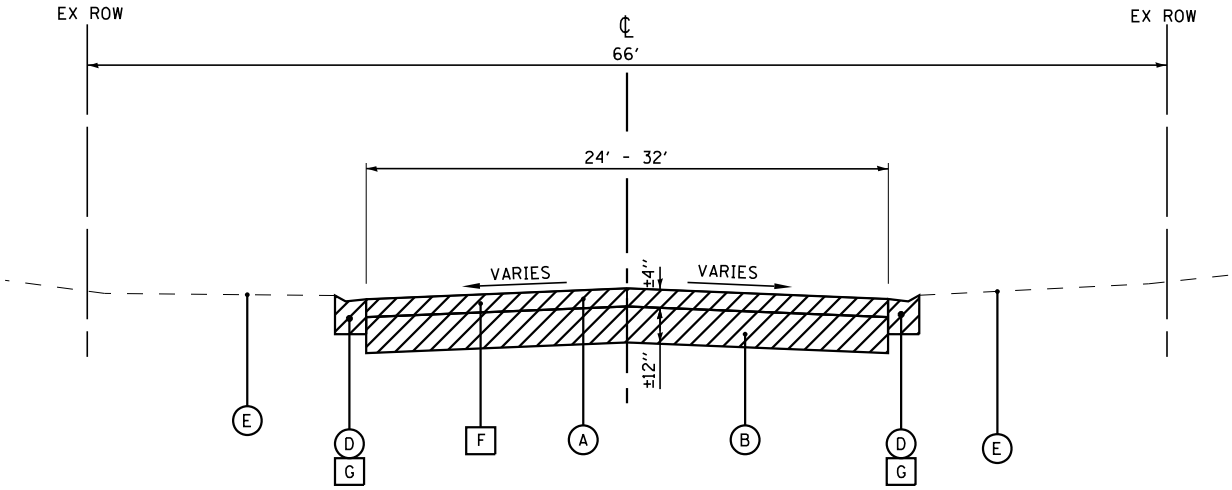

EXISTING TYPICAL SECTION
(NOT TO SCALE)

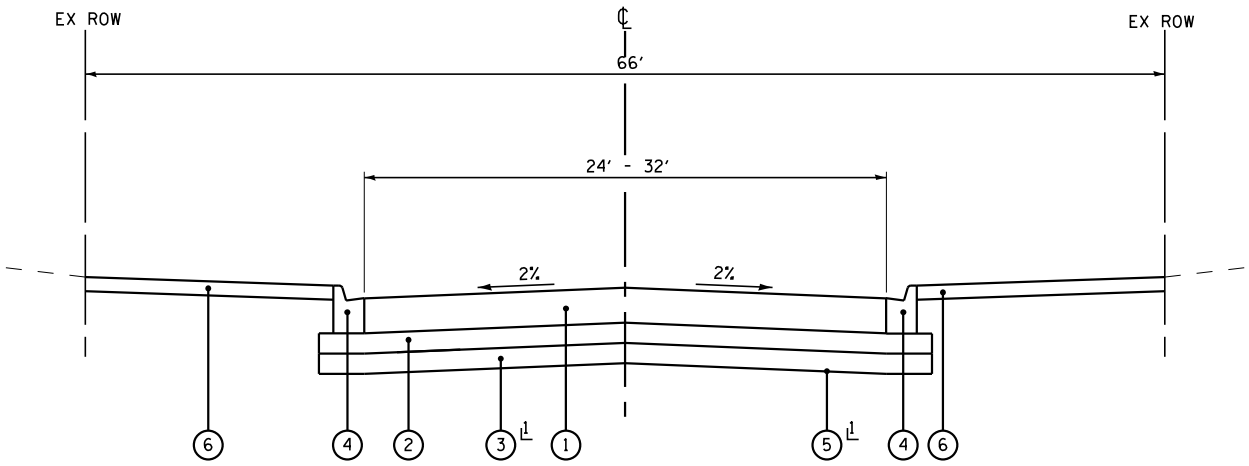

PROPOSED TYPICAL SECTION
(NOT TO SCALE)

1 ONLY USED IN UNDERCUT AREAS, AS DETERMINED BY ENGINEER

EXISTING LEGEND

- (A) EXISTING HOT-MIX ASPHALT PAVEMENT
- (B) EXISITNG AGGREGATE BASE COURSE
- (C) EXISTING SIDEWALK
- (D) EXISTING CONCRETE CURB AND GUTTER
- (E) GROUND SURFACE
- [F] HOT-MIX ASPHALT PAVEMENT AND BASE COURSE REMOVAL
- [G] CONCRETE CURB AND GUTTER REMOVAL
- REMOVAL ITEM

PROPOSED LEGEND

- (1) PORTLAND CEMENT CONCRETE PAVEMENT, 8″
- (2) AGGREGATE BASE COURSE TYPE B 6″
- (3) SUBGRADE REMOVAL AND REPLACEMENT
- (4) COMBINATION CONCRETE CURB AND GUTTER TYPE B-6.12
- (5) GEOTECHNICAL FABRIC FOR GROUND STABILIZATION
- (6) PARKWAY RESTORATION

EXHIBIT 9

BAXTER & WOODMAN Consulting Engineers

CONCRETE PAVEMENT RECONSTRUCTION
RIDGEWOOD SUBDIVISION

VILLAGE of WESTERN SPRINGS
COOK COUNTY, ILLINOIS

Ridgewood Subdivision
Pavement Summary

Street	From	To	Length (ft)	Width (ft)	Area (sq yd)	Pavement Type	C&G Type	PASER	Full Depth HMA Removal and Replacement: C&G Replacement (%)	C&G Cost (Spot Repair)	Full Depth HMA R&R Cost	Total Cost	HMA Reconstruction Cost	PCC Reconstruction Cost	Sidewalk Construction Cost
Ridgewood Dr	Subdivision Limit	Birch Ln	2,381	24	6,440	asphalt	M-4.12	3	25-50	$76,000	$358,000	$434,000	$917,000	$1,092,000	$194,000 - $383,000
Birch Ln	East Abutment of Bridge	Woodland Dr	1,323	30	4,420	asphalt	M-4.12	4	30	$33,000	$244,000	$277,000	$629,000	$748,000	$107,000 - $213,000
Longmeadow Ln	Ridgewood Dr	Grand Av	1,679	24	6,460	asphalt	M-4.12	4	25-40	$45,000	$357,000	$402,000	$919,000	$1,093,000	$136,000 - $270,000
Park Ln	Ridgewood Dr	Woodland Dr	759	25	4,110	asphalt	M-4.12	3	40	$25,000	$227,000	$252,000	$584,000	$695,000	$61,000 - $122,000
Maple Ln	Ridgewood Dr	Crestview Dr	528	24	1,860	asphalt	M-4.12	4	30	$13,000	$103,000	$116,000	$265,000	$315,000	$43,000 - $85,000
Crest Ln	Ridgewood Dr	Woodland Dr	558	24	1,520	asphalt	M-4.12	4	30	$14,000	$84,000	$98,000	$217,000	$258,000	$45,000 - $90,000
Oak Ln	Ridgewood Dr	Woodland Dr	557	25	1,520	asphalt	M-4.12	4	40	$18,000	$84,000	$102,000	$216,000	$257,000	$45,000 - $90,000
Ridge Ln	Ridgewood Dr	Woodland Dr	490	24	1,320	asphalt	M-4.12	4	40	$16,000	$73,000	$89,000	$188,000	$224,000	$40,000 - $79,000
Woodland Dr	Ridge Ln	55th St	2,610	24-32	7,250	asphalt	M-4.12	4	10-35	$57,000	$403,000	$460,000	$1,035,000	$1,230,000	$212,000 - $422,000
Park Pl	Woodland Dr	Subdivision Limit	181	24	490	asphalt	M-4.12	4	30	$5,000	$27,000	$32,000	$70,000	$83,000	$15,000 - $29,000
Park Pl	Subdivision Limit	Grand Av	429	25	1,200	asphalt	B-6.12	4	30	$11,000	$66,000	$77,000	$171,000	$203,000	$35,000 - $69,000
Oak Ln	Woodland Dr	Subdivision Limit	170	24	460	asphalt	M-4.12	4	25	$4,000	$26,000	$30,000	$66,000	$78,000	$14,000 - $28,000
Oak Ln	Subdivision Limit	Grand Av	145	24	390	asphalt	B-6.12	4	25	$3,000	$22,000	$25,000	$56,000	$66,000	$12,000 - $24,000
Grand Av	Linden Cir	Subdivision Limit	1,682	25	4,780	asphalt	B-6.12	3	15-35	$29,000	$265,000	$294,000	$680,000	$810,000	$136,000 - $271,000
Grand Av	Subdivision Limit	55th St	805	30-32	3,660	asphalt	M-4.12	4	5-20	$11,000	$203,000	$214,000	$521,000	$619,000	$65,000 - $129,000
Linden Ln	Linden Cir	Linden Ct	330	25	930	asphalt	B-6.12	3	40	$11,000	$52,000	$63,000	$133,000	$158,000	$27,000 - $53,000
Linden Cir	Linden Ln	Cul-de-sac	125	25	1,140	asphalt	B-6.12	4	20	$2,000	$63,000	$65,000	$162,000	$193,000	$10,000 - $20,000
Linden Ct	Linden Ln	Cul-de-sac	610	25	2,220	asphalt	B-6.12	4	20	$10,000	$123,000	$133,000	$316,000	$376,000	$49,000 - $98,000
Lawn Dr	Linden Ct	Grand Av	1,590	25	4,470	asphalt	B-6.12	3-4	20-60	$50,000	$248,000	$298,000	$636,000	$757,000	$129,000 - $256,000
Lawn Cir	Lawn Dr	Cul-de-sac	215	25	1,390	asphalt	B-6.12	4	25	$5,000	$77,000	$82,000	$198,000	$235,000	$18,000 - $35,000
Lawn Ct	Lawn Dr	Cul-de-sac	300	25	1,630	asphalt	B-6.12	3	20	$5,000	$90,000	$95,000	$232,000	$276,000	$24,000 - $48,000
Park Pl	Lawn Dr	Wolf Rd	440	25	1,180	asphalt	B-6.12	4	25	$9,000	$65,000	$74,000	$168,000	$200,000	$36,000 - $71,000
		Totals	**17,907**	**Feet**	**58,840**	**Square Yards**				**$452,000**	**$3,260,000**	**$3,712,000**	**$8,379,000**	**$9,966,000**	**$1,453,000 - $2,885,000**
			3.4	**Miles**											

RIDGEWOOD SUBDIVISION UTILITY STUDY

Village of Western Springs
Illinois

PRELIMINARY SIDEWALK LAYOUT

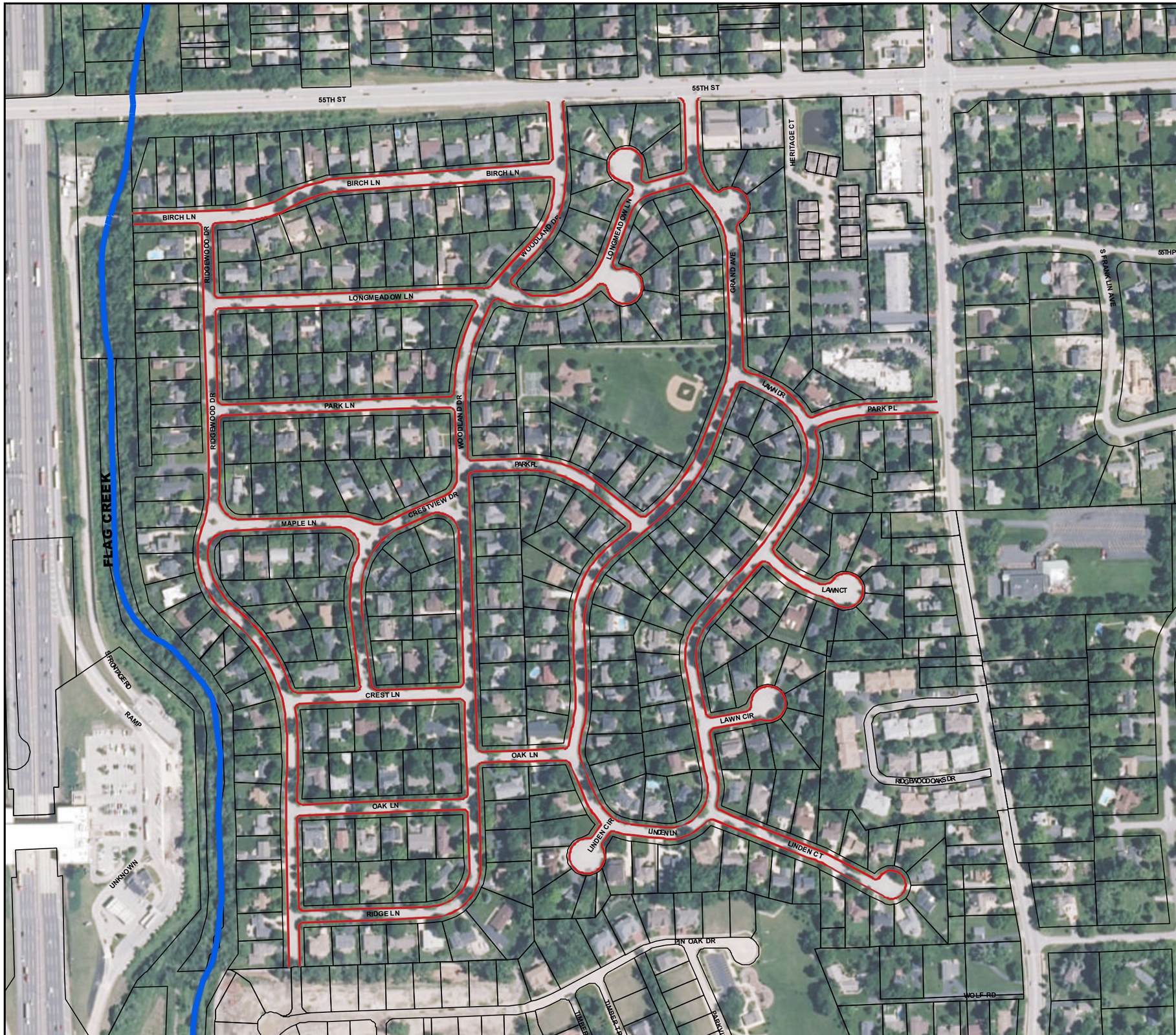

PROPOSED

Sidewalk

Exhibit 11

N

1 " = 300 '

0 150 300 600 Feet

BAXTER & WOODMAN
Consulting Engineers

Service Layer Credits: Source: Esri, DigitalGlobe, GeoEye, i-cubed, USDA, USGS, AEX, Getmapping, Aerogrid, IGN, IGP, swisstopo, and the GIS User Community

L:\Mokena\WSPRV\140970-Ridgewood\temp\GIS\Prl Sidewalk.mxd Saved: 9/3/2015 2:53:36 PM Designer: 364cak

RIDGEWOOD SUBDIVISION UTILITY STUDY

Village of Western Springs
Illinois

PRELIMINARY STREET LIGHTING LAYOUT

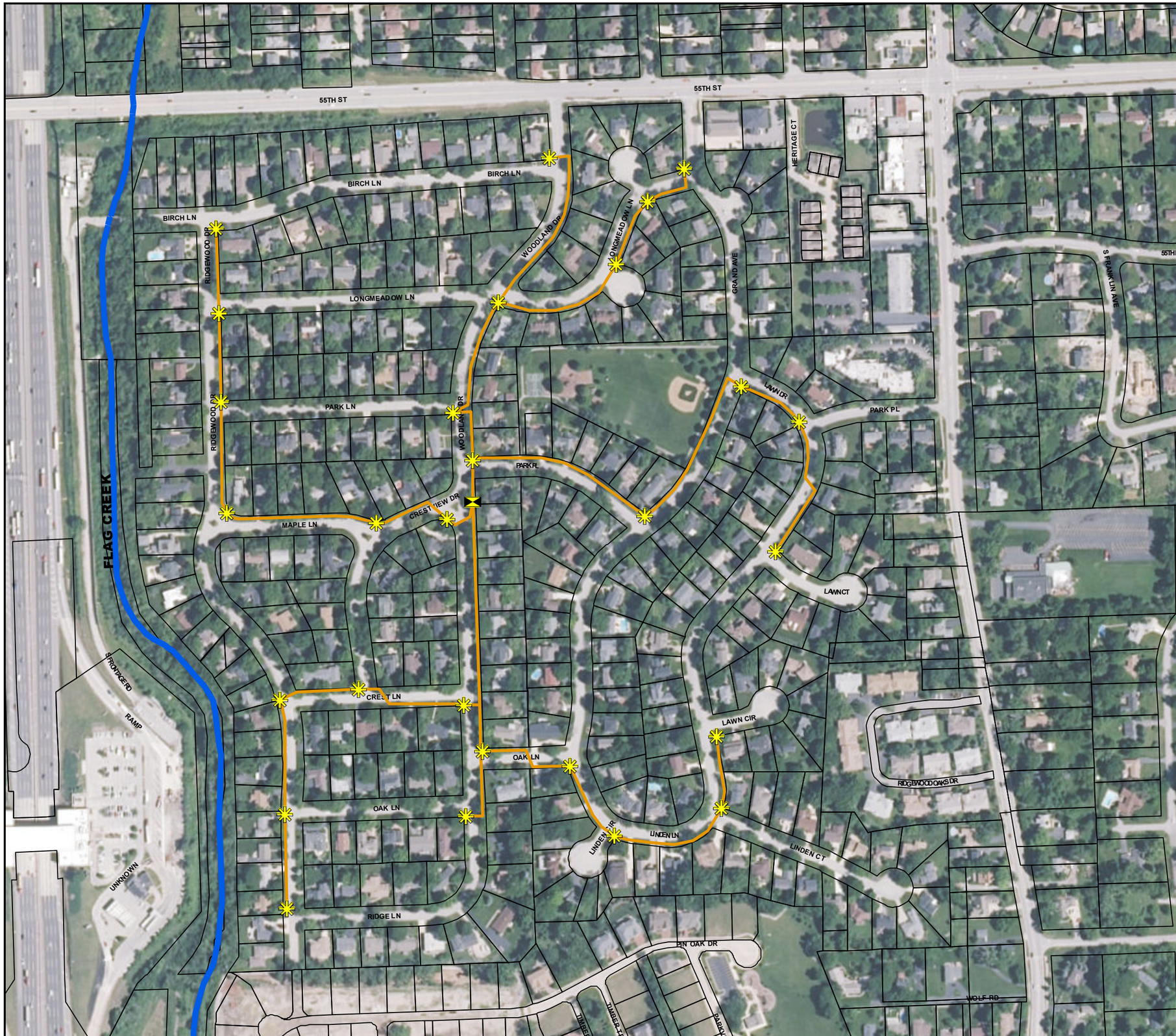

PROPOSED

- Street Light
- Light Controller
- Proposed Light Conduit

Exhibit 12

N

1 " = 300 '

0 150 300 600 Feet

BAXTER & WOODMAN
Consulting Engineers

Service Layer Credits: Source: Esri, DigitalGlobe, GeoEye, i-cubed, USDA, USGS, AEX, Getmapping, Aerogrid, IGN, IGP, swisstopo, and the GIS User Community

I:\Mokena\WSPRV\140970-Ridgewood\tempGIS\Prit Street Lighting.mxd Saved: 9/3/2015 2:46:18 PM Designer: 364cak

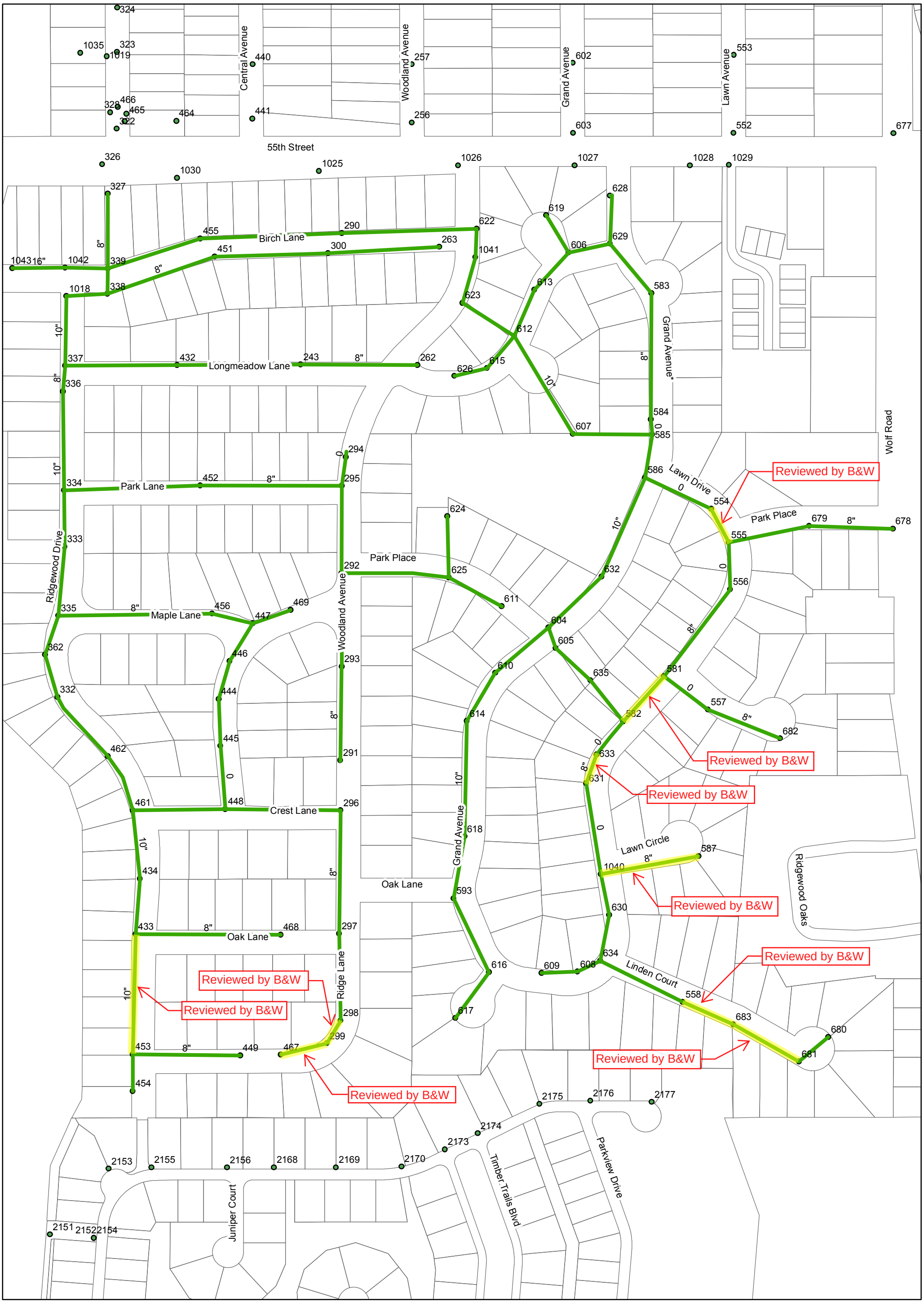

Village of Western Springs
Sewer Televising Program

Sanitary Sewer ~ 19,306 LF