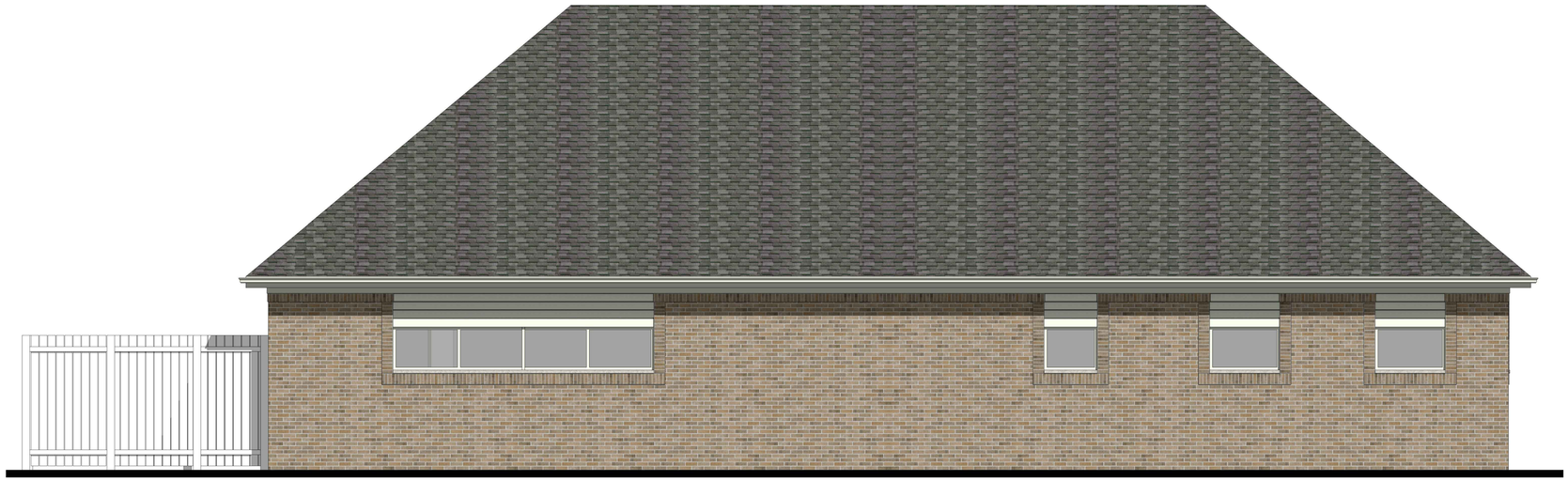

## NORTH ELEVATION

0 2' 4' 8'

SCALE: 1/4" = 1'-0"

## EAST ELEVATION

0 2' 4' 8'

SCALE: 1/4" = 1'-0"

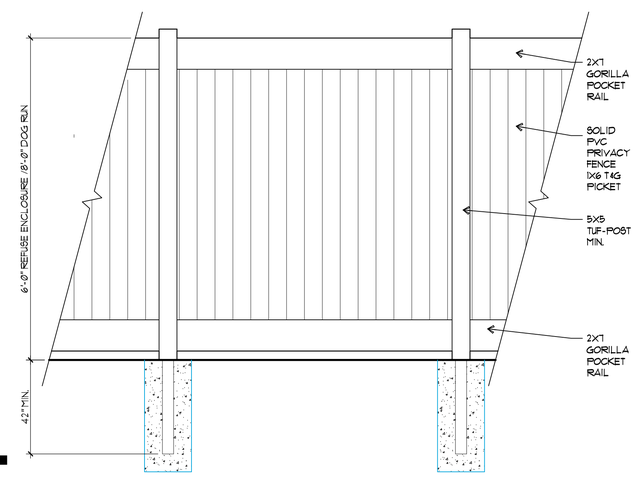


1 A-3.0 **PVC FENCE DETAIL**

3/4" = 1'-0"


LINDENGROUP

ARCHITECTURE
LAND PLANNING
INTERIOR ARCHITECTURE
LANDSCAPE ARCHITECTURE

10100 ORLAND PARKWAY SUITE 110
ORLAND PARK, ILLINOIS 60467
P:708.799.4400 F:708.799.4434
WWW.LINDENGROUPINC.COM

RWE | MANAGEMENT COMPANY
16 W 361 S. Frontage Rd., Suite 106
Burr Ridge, IL 60527
(630) 734-0883
JASON@RWEMANAGEMENT.COM


**BOONE**
**Veterinary Clinic**
4700 Commonwealth Ave.
Western Springs, IL 60558

| DATE | DRAWN | DESCRIPTION |
|---|---|---|
| 2016-04-08 | TMH | PRELIMINARY REVISIONS |
| 2016-04-25 | TMH | PRELIMINARY REVISIONS |

2015-0138
PROJECT NUMBER

FILE NUMBER
5-11-2016
DATE

TMH
DRAWN BY

FINAL REVIEW


COPYRIGHT - LINDEN GROUP INC.
ALL RIGHTS RESERVED.
ALL DRAWINGS, SPECIFICATIONS, PLANS, CONCEPTS, ARRANGEMENTS AND DESIGNS REPRESENTED OR REFERRED TO IN THESE DOCUMENTS ARE INSTRUMENTS OF SERVICE, AND THEREFORE ARE THE PROPERTY OF LINDEN GROUP INC. NONE OF THE ABOVE MAY BE DISCLOSED TO ANY PERSONS FOR ANY PURPOSE WITHOUT THE EXPRESS WRITTEN AUTHORIZATION OF LINDEN GROUP INC.


PROPOSED ELEVATIONS

SHEET NAME
A-3.0
SHEET

SHEET OF