T-Mobile

T-Mobile Central LLC
Chicago / Milwaukee Markets
1400 Opus Place
Downers Grove, IL 60515

May 18, 2020

Via Certified Mail

Village of Western Springs
Attn: Village Manager
740 Hillgrove Avenue
Western Springs, IL 60558

Re: This Lease Agreement, dated August 11, 2003, by and between the Village of Western Springs and T-Mobile Central LLC, as successor in interest to VoiceStream GSM I Operating Company, LLC ("Lease").

T-Mobile Anchor Site ID: CH22901A – 300 48th Street (Village of Western Springs Water Tank)

Dear Sir or Madam:

Our office has been retained as site acquisition agents on behalf of T-Mobile. The Lease authorizes T-Mobile to use its premises for the operation and maintenance of its wireless communications facility. We value our landlords and want to keep you informed of our maintenance and upgrades on the antenna facilities installed on your property.

This letter is notice that T-Mobile needs to perform site modification work on its communications facility and is seeking your acknowledgement that the work may proceed. The work will consist of reconfiguring the site to make it better suited to meet customers' needs. Construction Drawings will be provided to the address above upon receipt.

While the work entails the replacement of existing items of equipment, the work is not very different from routine maintenance work that we do, and will not interfere with your business or tenants. The work will be performed in compliance with the non-interference requirements of our lease and with all applicable laws and regulations.

Please indicate your acknowledgement that work may proceed by signing this letter below and returning to Peggy Cronin via email at cronin@insite-inc.com as well as if you have any questions, you may call me at (773) 829-1657.

Sincerely,

Peggy Cronin
Site Acquisition Agent
on behalf of T-Mobile Central LLC

Agreed:
Village of Western Springs

_____
Name/Title

_____
Date

CH22901A
WESTERN SPRINGS WT

4900 S WILLOW SPRINGS RD.
WESTERN SPRINGS, IL 60558

SITE TYPE

WATER TOWER

PROJECT TYPE

ANCHOR

SITE INFORMATION

TOWER OWNER: VILLAGE OF WESTERN SPRINGS

OWNER CONTACT: TBD

SITE ADDRESS: 4900 S WILLOW SPRINGS RD.
WESTERN SPRINGS, IL 60558

COUNTY: COOK

JURISDICTION: VILLAGE OF WESTERN SPRINGS

PIN: AJ3066

APPLICANT:
T-MOBILE
2001 BUTTERFIELD RD.
DOWNERS GROVE, IL 60515
TEL. (773) 589-0643

SITE ACQUISITION:
INSITE R.E., INC.
1S660 MIDWEST RD. STE 140
OAKBROOK TERRACE, IL 60181
TEL. (630) 560-1004

ENGINEERING CONTACT:
FORGE SERVICES, INC.
1S660 MIDWEST RD. STE 140
OAKBROOK TERRACE, IL 60181
TEL. (630) 451-9890
WWW.FORGE-INC.COM

SCOPE OF WORK

QTY.	EQUIPMENT	QTY.	EQUIPMENT
(3)	FXFB TO BE REMOVED	(3)	ABIC'S
(3)	NEW ANTENNAS		
(3)	NEW AHFIG		
(3)	NEW HCS 2.0 TRUNK HYBRID CABLE		
(1)	NEW HCS 2.0 TOWER JUNCTION BOX		
(1)	AMIA		
(1)	ASIK		
(1)	ASIB		
(1)	ABIA		
(3)	ABIL'S		

CODE COMPLIANCE

ALL WORK AND MATERIAL SHALL COMPLY WITH THESE AND ALL BUILDING CODES AS ADOPTED AND AMENDED BY THE AGENCY WITH OVERSIGHT AUTHORITY:

- STATE BUILDING CODE: 2003 INTERNATIONAL BUILDING CODE.
- 2005 NATIONAL ELECTRIC CODE W/ AMENDMENTS.
- NFPA 780-2000 LIGHTING PROTECTION CODE.
- AMERICAN CONCRETE INSTITUTE (ACI 318, BUILDING CODE REQUIREMENTS FOR STRUCTURAL CONCRETE.
- AMERICAN INSTITUTE OF STEEL CONSTRUCTION (AISC) MANUAL OF STEEL CONSTRUCTION, ASD, 14th EDITION.
- TELECOMMUNICATIONS INDUSTRY ASSOCIATION (TIA) 222-G, STRUCTURAL STANDARDS FOR STEEL ANTENNA TOWERS AND ANTENNA SUPPORTING STRUCTURES.
- TIA 607 COMMERCIAL BUILDING GROUNDING AND BONDING REQUIREMENTS FOR TELECOMMUNICATIONS.
- FACILITY IS UNMANNED AND NOT FOR HUMAN HABITATION. HANDICAPPED ACCESS REQUIREMENTS DO NOT APPLY.

ADDRESS

COORDINATES

PROJECT NOTES

THESE DRAWINGS ARE PREPARED BASED ON RFDS DATED 06/13/2020.

CONTRACTOR TO VERIFY AND OBTAIN LATEST RFDS BEFORE CONSTRUCTION.

CONTRACTOR SHALL VERIFY EXISTING DIMENSIONS, CONDITIONS, EQUIPMENT ACCESSIBILITY AND MATERIALS WITH CONFORMITY TO THESE DRAWINGS AND REPORT DISCREPANCIES IN WRITING PRIOR TO BID SUBMITTAL.

CONTRACTOR TO OBTAIN "ISSUED FOR CONSTRUCTION" DRAWINGS PRIOR TO CONSTRUCTION START.

LOCATION MAP

NO SCALE

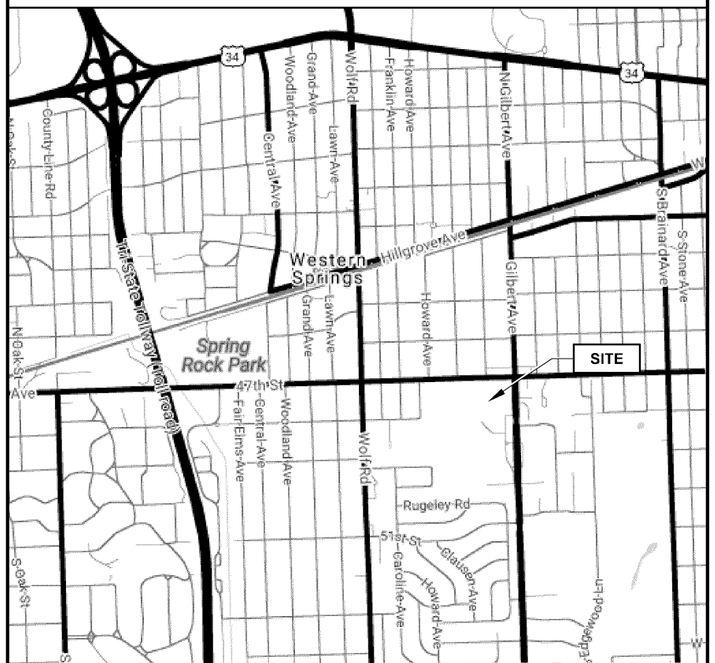

LATITUDE: 41° 48' 09.92"N (41.802756°N) (NAD 83)
LONGITUDE: 087° 53' 30.51"W (087.891808°W) (NAD 83)
GROUND ELEVATION: 673 FT. (NAVD 88)
DATA SOURCE: 2C - CERTIFICATE

DRAWING INDEX

NO.	SHEET NO.	SHEET TITLE	REVISIONS
1	T1.1	TITLE SHEET	
2	C1.1	COMPOUND PLAN	
3	C1.2	EQUIPMENT LAYOUT	
4	C2.1	ELEVATION	
5	C3.1	ANTENNA LAYOUT	
6	C4.1	EQUIPMENT DETAILS	
7	RF1.1	ANTENNA & CABLE SCHEDULE	
8	RF2.1	RFDS	
9	RF3.1	ANTENNA DETAILS	
10	RF4.1	NSN CONFIGURATION DIAGRAM	
11	G1.1	GROUNDING DIAGRAM	
12	G2.1	GROUNDING DIAGRAM	
13	GN1.1	GENERAL NOTES	
14	GN2.1	GENERAL NOTES	
15	GN3.1	GENERAL NOTES	
16	GN4.1	GENERAL NOTES	

AREA MAP

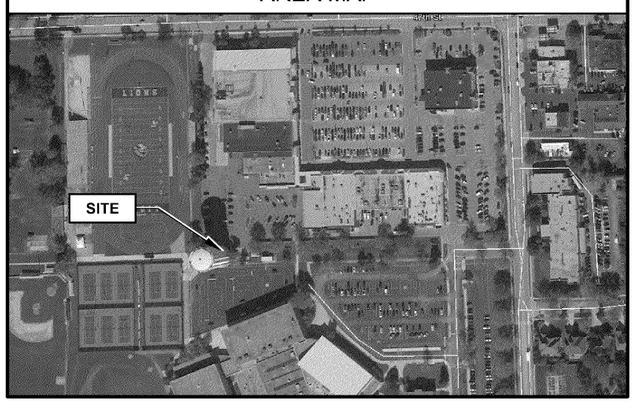

Know what's **below.** **Call** before you dig.

ILLINOIS ONE-CALL SYSTEM
CALL BEFORE YOU DIG
THIS NOTICE MUST BE AT LEAST 72 HOURS /THREE WORKING DAYS PRIOR TO THE START OF EXCAVATION

T-MOBILE USA, INC.
2001 BUTTERFIELD RD.
DOWNERS GROVE, IL 60515

Insite inc.
Real Estate Consulting Services
1S660 MIDWEST RD.
OAKBROOK TERRACE, IL 60181

forge
FORGE SERVICES, INC.
T: (630) 451-9890
1S660 MIDWEST RD. STE. 140
OAKBROOK TERRACE, IL 60181

FORGE PROJECT NO: **8009**
DRAWN BY: **AC**
CHECKED BY: **JL**

REV	DATE	DESCRIPTION
A	06/26/2020	ISSUED FOR REVIEW
0	07/21/2020	ISSUED FOR PERMIT

CONSTRUCT ONLY FROM DRAWINGS MARKED "ISSUED FOR CONSTRUCTION"

FREDERICK Y. BENJAMIN
062-033842
REGISTERED PROFESSIONAL ENGINEER OF ILLINOIS
EXPIRES 11/30/2021

© 2020 FORGE SERVICES, INC. ALL RIGHTS RESERVED

CH22901A
WESTERN SPRINGS WT

4900 S WILLOW SPRINGS RD.
WESTERN SPRINGS, IL 60558

WATER TOWER

TITLE SHEET

T1.1

THIS DRAWING IS SCALED FOR 11×17 PAPER (U.S. GOVT. "TABLOID")

LEGEND

- MANHOLE/VALVE VAULT
- CATCH BASIN
- CURB INLET
- VALVE
- FIRE HYDRANT
- STREET LIGHT/LIGHT POST
- UTILITY/POWER POLE
- GUY WIRE/ANCHOR
- TELEPHONE PEDESTAL
- ELECTRIC METER
- GAS METER
- TRAFFIC SIGNAL
- TRAFFIC SIGNAL BOX
- SIGN
- MAIL BOX
- HANDHOLE
- DRAINPIPE
- FES (AT END OF PIPE)
- CHAIN LINK FENCE
- WOOD FENCE
- DEPRESSED CURB
- CONCRETE CURB & GUTTER
- SANITARY SEWER
- STORM SEWER
- WATER MAIN
- OVERHEAD ELECTRIC
- UNDERGROUND ELECTRIC
- OVERHEAD WIRES
- UNDERGROUND TELCO
- GAS LINE
- UNDERGROUND FIBER
- BUSH/SHRUB
- TREE DECIDUOUS
- TREE NON-DECIDUOUS
- DRAINAGE ARROW
- CONTOUR LINE
- 379.45 + SPOT ELEVATION
- T/F TOP OF FOUNDATION
- T/C TOP OF CONCRETE
- FF FINISHED FLOOR
- AGL ABOVE GROUND LEVEL
- BOUNDARY LINE
- CONCRETE
- ASPHALT
- GRAVEL
- BRICK
- NEW BUILDING/EQUIPMENT
- EXISTING BUILDING
- LEASE SITE
- EASEMENT

1 COMPOUND PLAN

SCALE: 1" = 20'-0"

20 0 10 20

SCALE: 1"= 20'

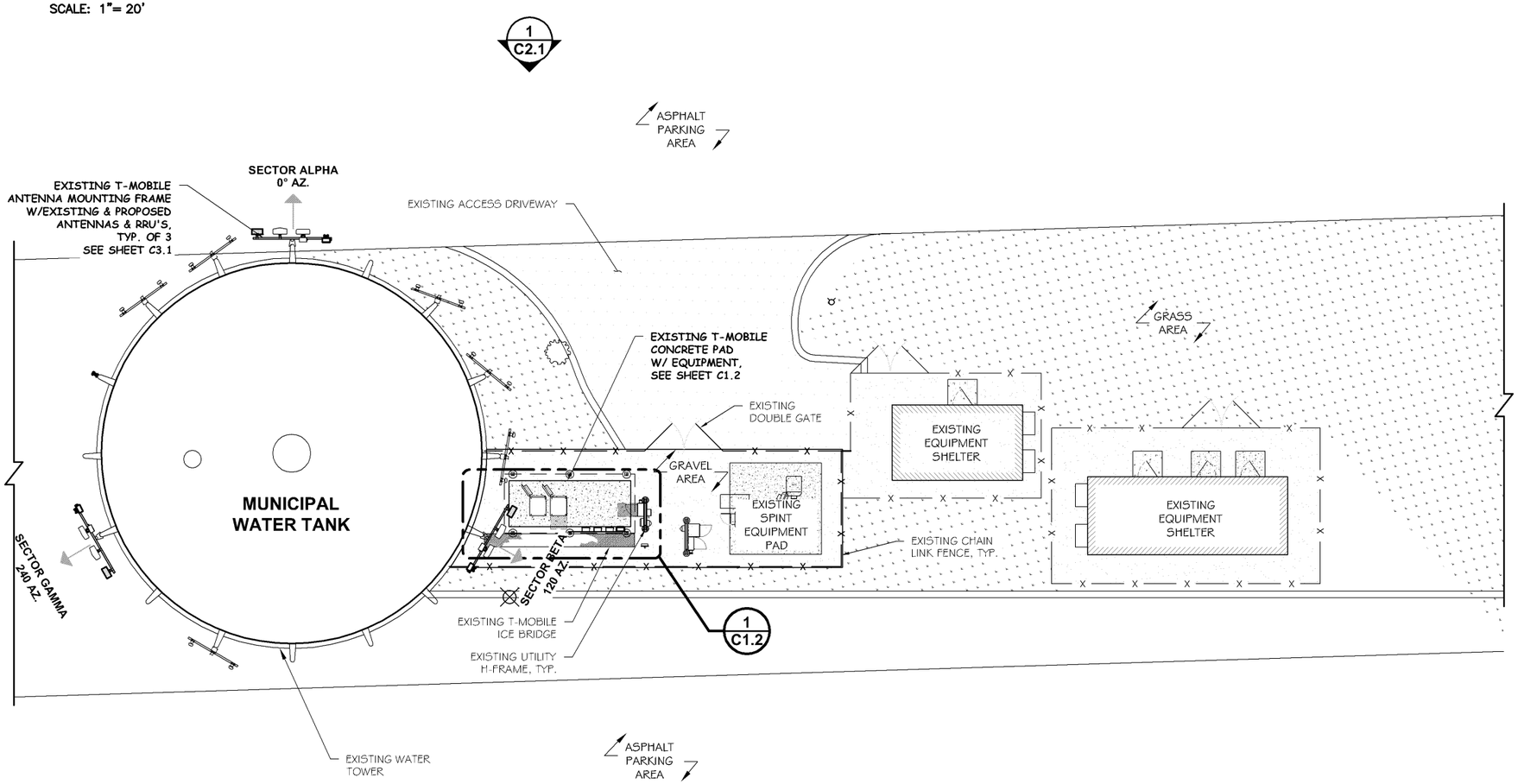

NOTES:

- THIS DESIGN INCLUDES A SEPARATE STRUCTURAL ANALYSIS REPORT. THESE DOCUMENTS TOGETHER CONSTITUTE THE 'DESIGN DOCUMENTS'.

- THE 'DESIGN DOCUMENTS' ARE BASED ON RECORDS OF RELEVANT PREVIOUS DESIGNS PROVIDED BY T-MOBILE AS BEING COMPLETE AND ACCURATE. PROVISIONS FOR ACCESS TO THIS FACILITY WAS NOT PROVIDED AND VERIFICATION OF THE STRUCTURAL COMPONENTS INDICATED IN THE PROVIDED DOCUMENTS WAS NOT CONDUCTED.

- OTHER ADDITIONS AND MODIFICATIONS COULD HAVE BEEN MADE TO THE TOWER SINCE THE TOWER APPURTENANCES WERE CATALOGED FOR THIS DESIGN. THEREFORE, PRIOR TO COMMENCEMENT OF WORK THE CONTRACTOR IS TO REVIEW AND COMPARE THE "AS-BUILT" CONDITION OF ALL STRUCTURAL COMPONENTS WITH THE CONDITIONS NOTED IN THESE 'DESIGN DOCUMENTS' BY FORGE.

- ALL VARIANCES BETWEEN "AS-BUILT" CONDITIONS AND THE 'DESIGN DOCUMENTS' IS TO BE REPORTED IN WRITING AND WORK TO STOP UNTIL FURTHER NOTICE FROM FORGE.

N

T-Mobile

T-MOBILE USA, INC.
2001 BUTTERFIELD RD.
DOWNERS GROVE, IL 60515

Insite inc.
Real Estate Consulting Services
1S660 MIDWEST RD.
OAKBROOK TERRACE, IL 60181

forge
FORGE SERVICES, INC.
T: (630) 451-9890
1S660 MIDWEST RD. STE. 140
OAKBROOK TERRACE, IL 60181

FORGE PROJECT NO: **8009**
DRAWN BY: **AC**
CHECKED BY: **JL**

REV	DATE	DESCRIPTION
A	06/26/2020	ISSUED FOR REVIEW
0	07/21/2020	ISSUED FOR PERMIT

CONSTRUCT ONLY FROM DRAWINGS MARKED "ISSUED FOR CONSTRUCTION"

FREDERICK Y. BENJAMIN
062-033842
REGISTERED PROFESSIONAL ENGINEER OF ILLINOIS

© 2020 FORGE SERVICES, INC. ALL RIGHTS RESERVED

CH22901A
WESTERN SPRINGS WT

4900 S WILLOW SPRINGS RD.
WESTERN SPRINGS, IL 60558

WATER TOWER

COMPOUND PLAN

C1.1

THIS DRAWING IS SCALED FOR 11×17 PAPER (U.S. GOVT. "TABLOID")

1 EXISTING EQUIPMENT LAYOUT

SCALE: 1/4" = 1'-0"

4' 0 2' 4'

SCALE: 1/4"= 1'-0"

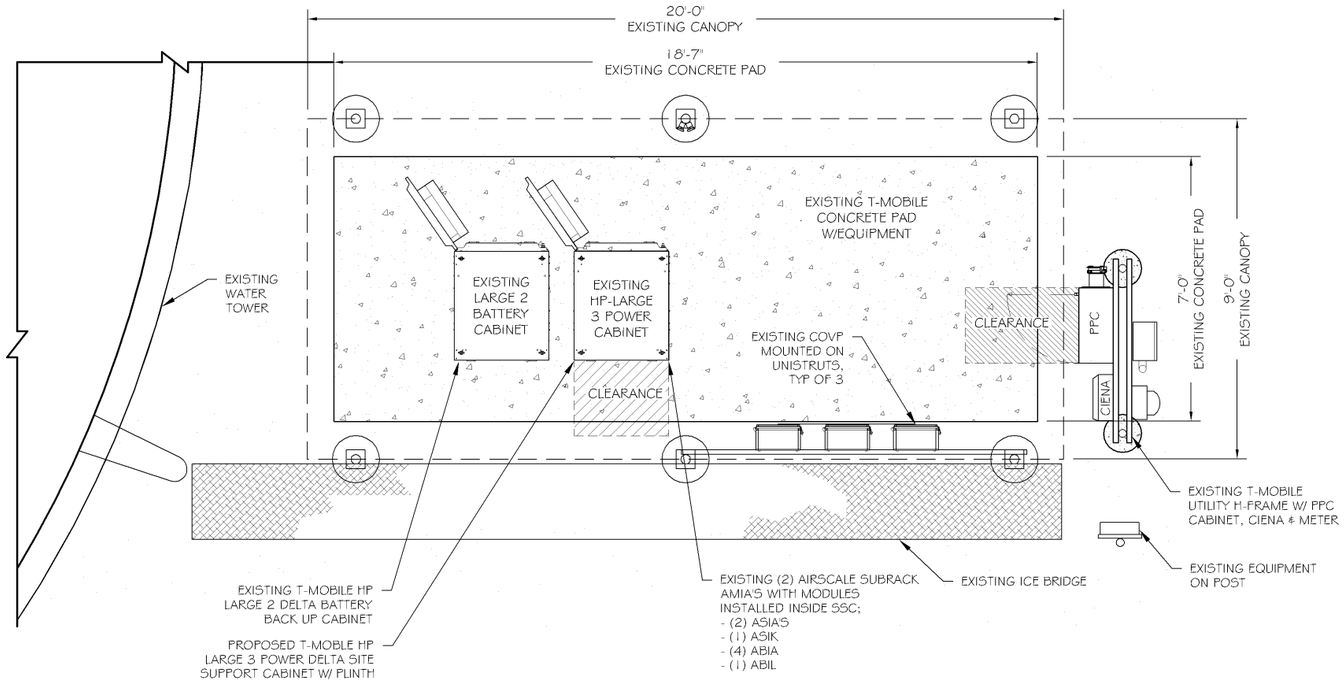

N

2 PROPOSED EQUIPMENT LAYOUT

SCALE: 1/4" = 1'-0"

4' 0 2' 4'

SCALE: 1/4"= 1'-0"

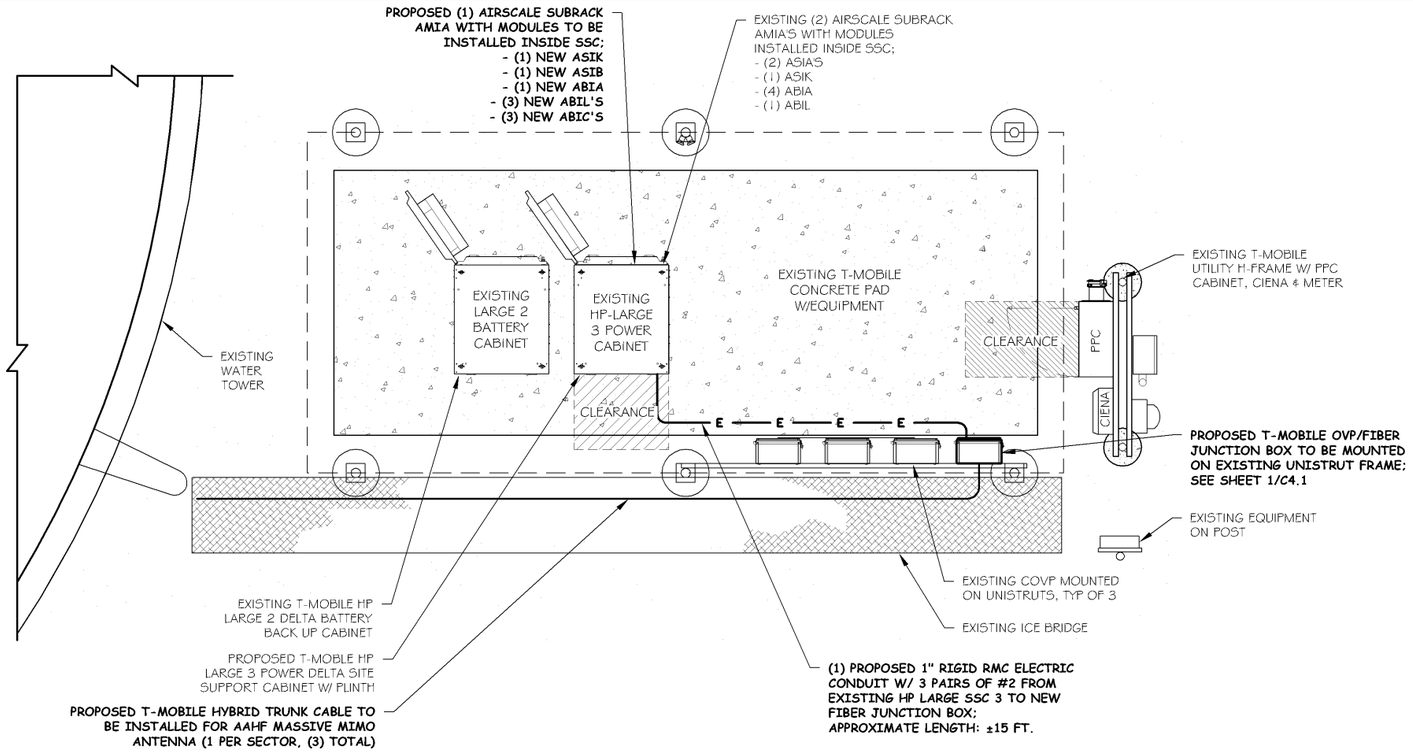

N

T-Mobile

T-MOBILE USA, INC.
2001 BUTTERFIELD RD.
DOWNERS GROVE, IL 60515

Insite inc.
Real Estate Consulting Services
15660 MIDWEST RD.
OAKBROOK TERRACE, IL 60181

forge
FORGE SERVICES, INC.
T: (630) 451-9890
15660 MIDWEST RD. STE. 140
OAKBROOK TERRACE, IL 60181

FORGE PROJECT NO: **8009**
DRAWN BY: **AC**
CHECKED BY: **JL**

REV	DATE	DESCRIPTION
A	06/26/2020	ISSUED FOR REVIEW
0	07/21/2020	ISSUED FOR PERMIT

CONSTRUCT ONLY FROM DRAWINGS MARKED "ISSUED FOR CONSTRUCTION"

FREDERICK Y. BENJAMIN
062-033842
REGISTERED PROFESSIONAL ENGINEER OF ILLINOIS

© 2020 FORGE SERVICES, INC. ALL RIGHTS RESERVED

CH22901A
WESTERN SPRINGS WT

4900 S WILLOW SPRINGS RD.
WESTERN SPRINGS, IL 60558

WATER TOWER

EQUIPMENT LAYOUT

C1.2

THIS DRAWING IS SCALED FOR 11×17 PAPER (U.S. GOVT. "TABLOID")

1 **ELEVATION**

SCALE: NTS

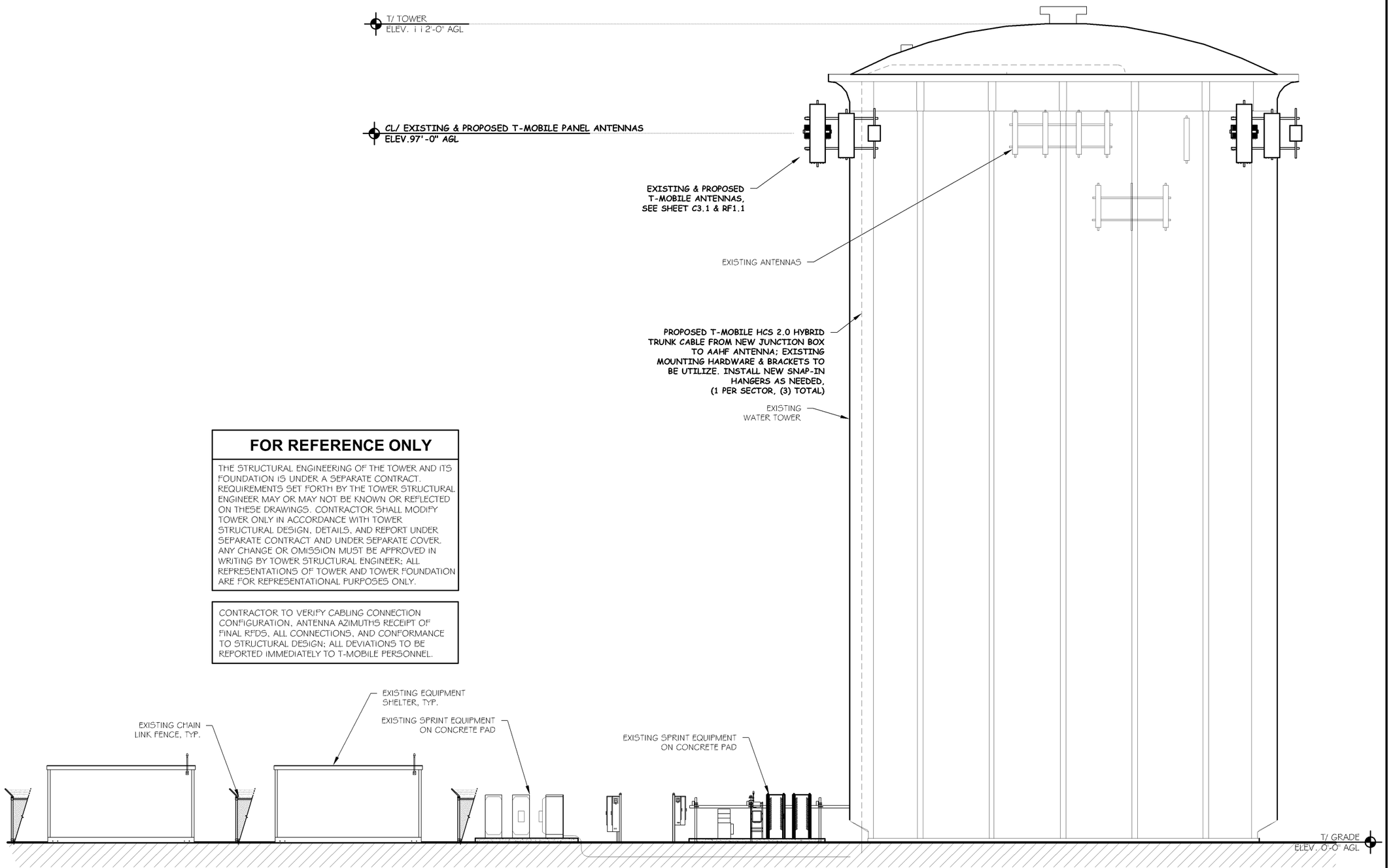

FOR REFERENCE ONLY

THE STRUCTURAL ENGINEERING OF THE TOWER AND ITS FOUNDATION IS UNDER A SEPARATE CONTRACT. REQUIREMENTS SET FORTH BY THE TOWER STRUCTURAL ENGINEER MAY OR MAY NOT BE KNOWN OR REFLECTED ON THESE DRAWINGS. CONTRACTOR SHALL MODIFY TOWER ONLY IN ACCORDANCE WITH TOWER STRUCTURAL DESIGN, DETAILS, AND REPORT UNDER SEPARATE CONTRACT AND UNDER SEPARATE COVER. ANY CHANGE OR OMISSION MUST BE APPROVED IN WRITING BY TOWER STRUCTURAL ENGINEER; ALL REPRESENTATIONS OF TOWER AND TOWER FOUNDATION ARE FOR REPRESENTATIONAL PURPOSES ONLY.

CONTRACTOR TO VERIFY CABLING CONNECTION CONFIGURATION, ANTENNA AZIMUTHS RECEIPT OF FINAL RFDS, ALL CONNECTIONS, AND CONFORMANCE TO STRUCTURAL DESIGN; ALL DEVIATIONS TO BE REPORTED IMMEDIATELY TO T-MOBILE PERSONNEL.

T-Mobile

T-MOBILE USA, INC.
2001 BUTTERFIELD RD.
DOWNERS GROVE, IL 60515

Insite inc.
Real Estate Consulting Services
1S660 MIDWEST RD.
OAKBROOK TERRACE, IL 60181

forge
FORGE SERVICES, INC.
T: (630) 451-9890
1S660 MIDWEST RD. STE. 140
OAKBROOK TERRACE, IL 60181

FORGE PROJECT NO:	**8009**
DRAWN BY:	**AC**
CHECKED BY:	**JL**

REV	DATE	DESCRIPTION
A	06/26/2020	ISSUED FOR REVIEW
0	07/21/2020	ISSUED FOR PERMIT

CONSTRUCT ONLY FROM DRAWINGS MARKED "ISSUED FOR CONSTRUCTION"

FREDERICK Y. BENJAMIN
062-033842
REGISTERED PROFESSIONAL ENGINEER OF ILLINOIS

© 2020 FORGE SERVICES, INC. ALL RIGHTS RESERVED

CH22901A
WESTERN SPRINGS WT

4900 S WILLOW SPRINGS RD.
WESTERN SPRINGS, IL 60558

WATER TOWER

ELEVATION

C2.1

THIS DRAWING IS SCALED FOR 11×17 PAPER (U.S. GOVT. "TABLOID")

1 EXISTING ANTENNA LAYOUT

SCALE: 3/8" = 1'-0"

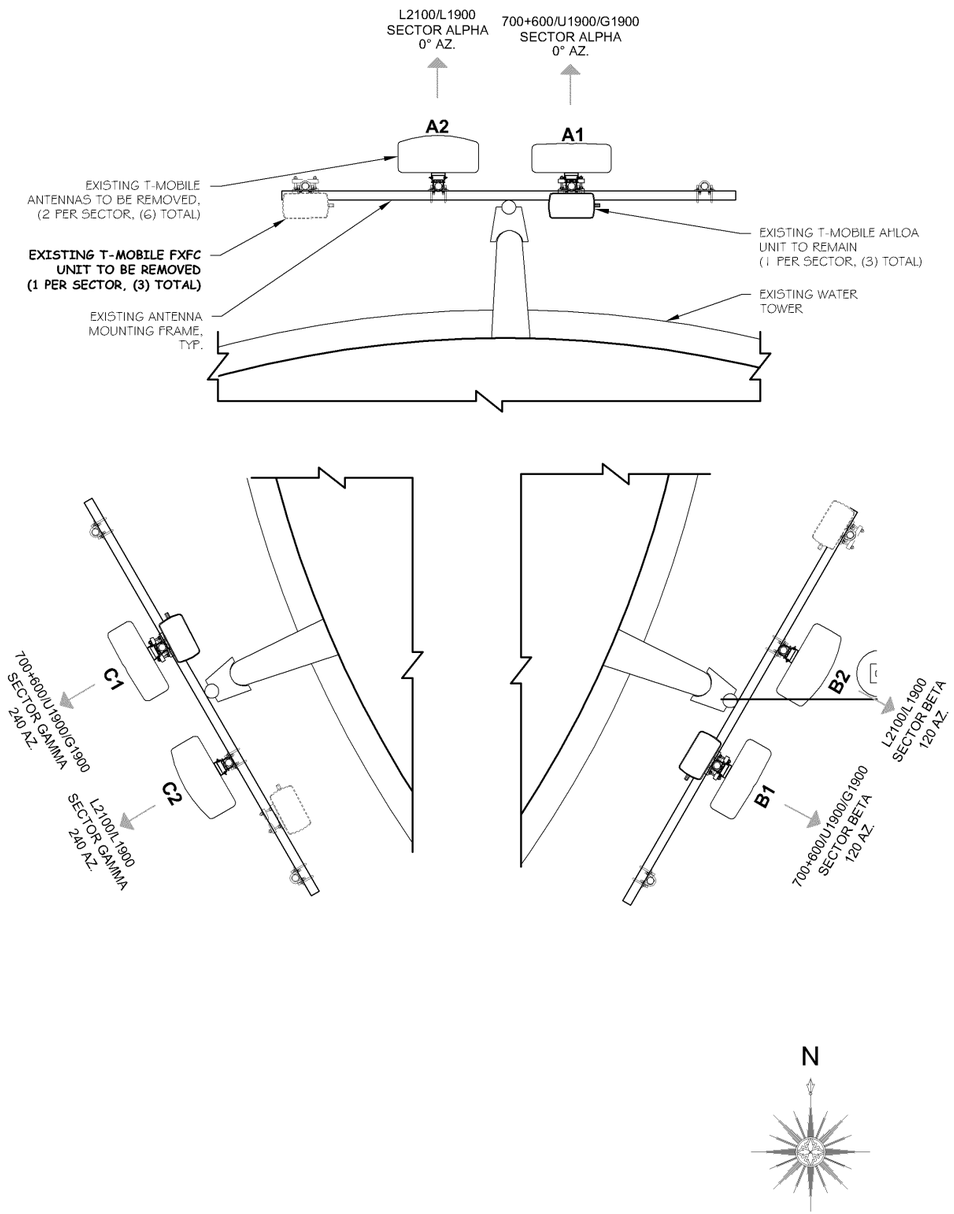

2 PROPOSED ANTENNA LAYOUT

SCALE: 3/8" = 1'-0"

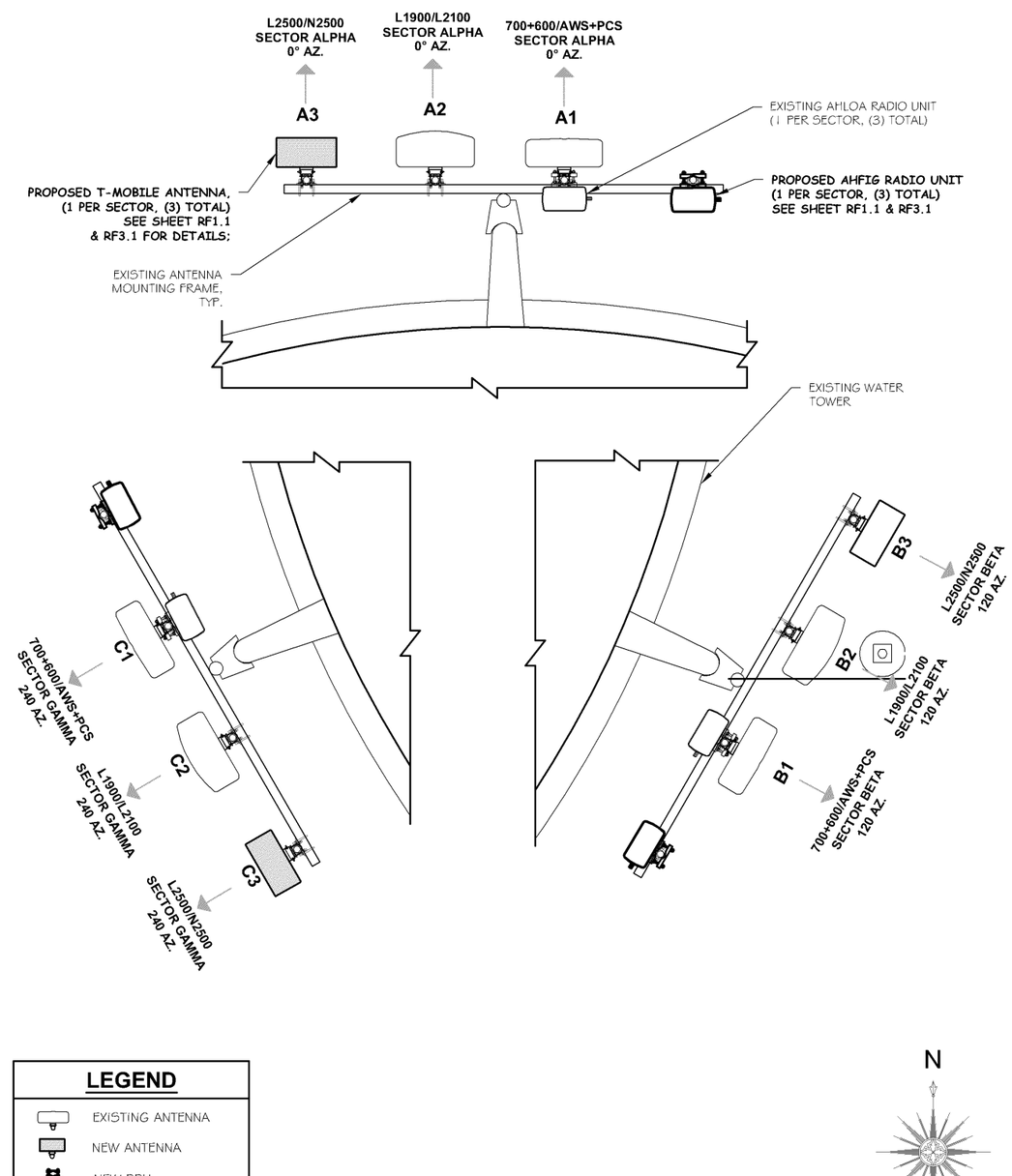

LEGEND

- EXISTING ANTENNA
- NEW ANTENNA
- NEW RRU
- REMOVED RRU

T-Mobile

T-MOBILE USA, INC.
2001 BUTTERFIELD RD.
DOWNERS GROVE, IL 60515

Insite inc.
Real Estate Consulting Services
1S660 MIDWEST RD.
OAKBROOK TERRACE, IL 60181

forge
FORGE SERVICES, INC.
T: (630) 451-9890
1S660 MIDWEST RD. STE. 140
OAKBROOK TERRACE, IL 60181

FORGE PROJECT NO:	8009
DRAWN BY:	AC
CHECKED BY:	JL

REV	DATE	DESCRIPTION
A	06/26/2020	ISSUED FOR REVIEW
0	07/21/2020	ISSUED FOR PERMIT

CONSTRUCT ONLY FROM DRAWINGS MARKED "ISSUED FOR CONSTRUCTION"

FREDERICK Y. BENJAMIN
062-033842
REGISTERED PROFESSIONAL ENGINEER OF ILLINOIS

© 2020 FORGE SERVICES, INC. ALL RIGHTS RESERVED

CH22901A
WESTERN SPRINGS WT

4900 S WILLOW SPRINGS RD.
WESTERN SPRINGS, IL 60558

WATER TOWER

ANTENNA LAYOUT

C3.1

THIS DRAWING IS SCALED FOR 11×17 PAPER (U.S. GOVT. "TABLOID")

1 NEMA 4 OVP/FIBER JUNCTION BOX

SCALE: NTS

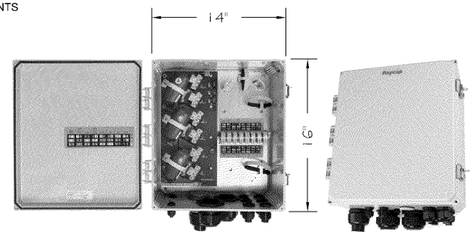

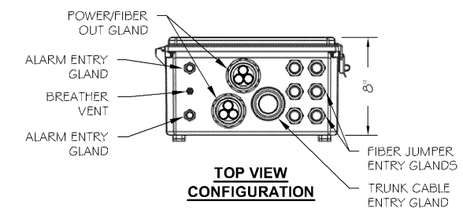

TOP VIEW CONFIGURATION

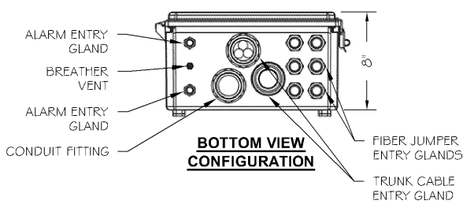

BOTTOM VIEW CONFIGURATION

RAYCAP OVP
MODEL #: RTMDC-5634-PF-48

WEIGHT: 21.85 LBS
DIMENSIONS: 16"H X 14"W X 8"D

FOR REFERENCE ONLY, SEE MANUF. DRAWINGS

2 AIRSCALE SM INDOOR AMIA

SCALE: NTS

Nokia AirScale SM Indoor Technical Datasheet

AirScale SM Indoor general specification	
Capacity Multi-RAT capable platform	Per Capacity plug-in unit in LTE16A: 8 LTE cells (FDD)
Minimum configuration	1 Common PIU (transport and control), 1 Capacity PIU (baseband processing)
Maximum configuration	2 Common PIU , 6 Capacity PIU
Installation options	19 inch standard rack, pole and wall (with mounting plinth), inside Outdoor Enclosure

AirScale SM Indoor mechanical specifications	
Dimensions	(3U) H 128 mm x W 447 mm x D 400 mm
Installation Depth	400mm + cooling air space 50mm
Weight	Minimum (Common PIU + Capacity PIU): 10.1kg Maximum (2 Common PIU + 6 Capacity PIU): 23.5kg
Ingress protection	IP20
Operational Temperature Range	-5°C to 55°C

AirScale SM Indoor electrical specifications	
Supply Voltage / Voltage Range	Nominal: -48V DC / -40.5V to -57V
Power consumption	1 Common PIU & 1 Capacity PIU: typ 210W 1 Common PIU & 3 Capacity PIU: typ 420W 2 Common PIU & 6 Capacity PIU: typ 840W

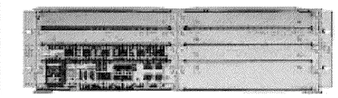

Minimum configuration (1x BTS)

Minimum configuration (2x BTS, 1 BTS per half subrack

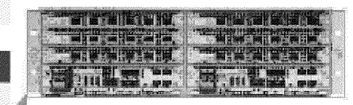

Maximum AirScale SM Indoor configuration (FL16A: 1 BTS per half subrack)

One logical BTS in full subrack (Future releases)

NOKIA

3 NOT USED

SCALE: NTS

T-Mobile

T-MOBILE USA, INC.
2001 BUTTERFIELD RD.
DOWNERS GROVE, IL 60515

Insite inc.
Real Estate Consulting Services
15660 MIDWEST RD.
OAKBROOK TERRACE, IL 60181

forge
FORGE SERVICES, INC.
T: (630) 451-9890
15660 MIDWEST RD. STE. 140
OAKBROOK TERRACE, IL 60181

FORGE PROJECT NO: **8009**
DRAWN BY: **AC**
CHECKED BY: **JL**

REV	DATE	DESCRIPTION
A	06/26/2020	ISSUED FOR REVIEW
0	07/21/2020	ISSUED FOR PERMIT

CONSTRUCT ONLY FROM DRAWINGS MARKED "ISSUED FOR CONSTRUCTION"

FREDERICK Y. BENJAMIN
062-033842
REGISTERED PROFESSIONAL ENGINEER OF ILLINOIS

© 2020 FORGE SERVICES, INC. ALL RIGHTS RESERVED

CH22901A
WESTERN SPRINGS WT

4900 S WILLOW SPRINGS RD.
WESTERN SPRINGS, IL 60558

WATER TOWER

EQUIPMENT DETAILS

C4.1

THIS DRAWING IS SCALED FOR 11×17 PAPER (U.S. GOVT. "TABLOID")

1 ANTENNA & CABLE SCHEDULE

SCALE: NTS

ANTENNA CONFIGURATION SCHEDULE

SECTOR	POS.	ANTENNA MANF.	ANTENNA MODEL NO.	TECHNOLOGY	ANTENNA SIZE	ANTENNA WEIGHT	AZIMUTH	RAD	ANTENNA GAIN	MECH. DOWN TILT	ELEC. DOWN TILT	RRH MODEL	FIBER JUMPER LENGTH	CABLE TYPE	COVP	NOTES
ALPHA	A1	COMMSCOPE	(1) FFHH-65C-R3 (E)	LTE 700/GSM-UMTS PCS	95.9"H X 25.2"W X 9.3"D	127.6 LBS	0°	97 FT	-	0	2/2/2/2	-	-	(E)	(E)	-
	A2	NOKIA	(1) AAFIA (E)	LTE AWS	72.44"H X 25.59"W X 11.81"D	273.37 LBS	0°	97 FT	-	0	2	(1) AHLOA (E) **(1) AHFIG (N)**	-	(E)		
	A3	**NOKIA**	**(1) AAHF (N)**	**N2500/LTE 2500**	**25.6"H X 19.7"W X 9.6"D**	**103.5 LBS**	**0°**	**97 FT**	-	0	-	-	**210 FT**	**(1) HYBRID CABLE**		
BETA	B1	COMMSCOPE	(1) FFHH-65C-R3 (E)	LTE 700/GSM-UMTS PCS	95.9"H X 25.2"W X 9.3"D	127.6 LBS	120°	97 FT	-	0	2/2/2/2	-	-	(E)	(E)	-
	B2	NOKIA	(1) AAFIA (E)	LTE AWS	72.44"H X 25.59"W X 11.81"D	273.37 LBS	120°	97 FT	-	0	2	(1) AHLOA (E) **(1) AHFIG (N)**	-	(E)		
	B3	**NOKIA**	**(1) AAHF (N)**	**N2500/LTE 2500**	**25.6"H X 19.7"W X 9.6"D**	**103.5 LBS**	**120°**	**97 FT**	-	0	-	-	**180 FT**	**(1) HYBRID CABLE**		
GAMMA	C1	COMMSCOPE	(1) FFHH-65C-R3 (E)	LTE 700/GSM-UMTS PCS	95.9"H X 25.2"W X 9.3"D	127.6 LBS	240°	97 FT	-	0	2/2/2/2	-	-	(E)	(E)	-
	C2	NOKIA	(1) AAFIA (E)	LTE AWS	72.44"H X 25.59"W X 11.81"D	273.37 LBS	240°	97 FT	-	0	2	(1) AHLOA (E) **(1) AHFIG (N)**	-	(E)		
	C3	**NOKIA**	**(1) AAHF (N)**	**N2500/LTE 2500**	**25.6"H X 19.7"W X 9.6"D**	**103.5 LBS**	**240°**	**97 FT**	-	0	-	-	**90 FT**	**(1) HYBRID CABLE**		

THIS SCHEDULE IS BASED ON RFDS V1.0 (DATE CREATED 06/13/2020, DATE UPDATED 06/13/2020)

2 COLOR CODING

SCALE: NTS

Sector	Radio Port #	First Ring	Second Ring	Third Ring
Alpha	1	Green	No Tape	No Tape
	2	Blue	No Tape	No Tape
	3	Brown	No Tape	No Tape
	4	White	No Tape	No Tape
	5	Red	No Tape	No Tape
	6	Gray	No Tape	No Tape
	7	Purple	No Tape	No Tape
	8	Orange	No Tape	No Tape
Beta	1	Green	Green	No Tape
	2	Blue	Blue	No Tape
	3	Brown	Brown	No Tape
	4	White	White	No Tape
	5	Red	Red	No Tape
	6	Gray	Gray	No Tape
	7	Purple	Purple	No Tape
	8	Orange	Orange	No Tape
Gamma	1	Green	Green	Green
	2	Blue	Blue	Blue
	3	Brown	Brown	Brown
	4	White	White	White
	5	Red	Red	Red
	6	Gray	Gray	Gray
	7	Purple	Purple	Purple
	8	Orange	Orange	Orange

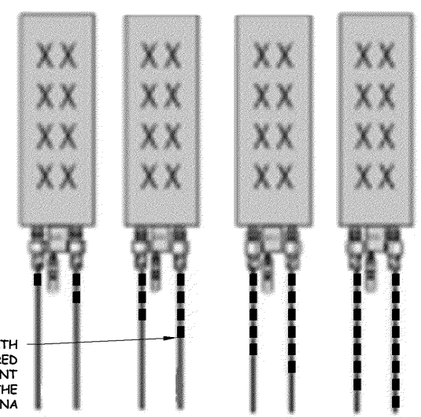

ANTENNA & COAXIAL CABLE SCHEDULE NOTES:

- ALL ANTENNAS SHALL BE FURNISHED WITH DOWNTILT BRACKETS. CONTRACTOR SHALL COORDINATE REQUIRED MECHANICAL DOWNTILT FOR EACH ANTENNA WITH RF ENGINEER. ANTENNA DOWNTILT SHALL BE SET AND VERIFIED BY A SMART LEVEL.
- ANTENNA CENTERLINE HEIGHT IS REFERENCE TO ELEVATION 0'-0".
- CONTRACTOR SHALL INSTALL COLOR CODE RINGS ON EACH OF THE HYBRID CABLES AND JUMPER CABLES WITH UV RESISTANT TAPE. ALL CABLES SHALL BE MARKED AT TOP AND BOTTOM WITH 2" COLOR TAPE OR STENCIL TAG. COLOR TAPE MAY BE OBTAINED FROM GRAYBAR ELECTRONICS.

3 RF JUMPER CONNECTION DETAIL

SCALE: NTS

JUMPERS TO BE TORQUED TO 221.27 IN/LBS

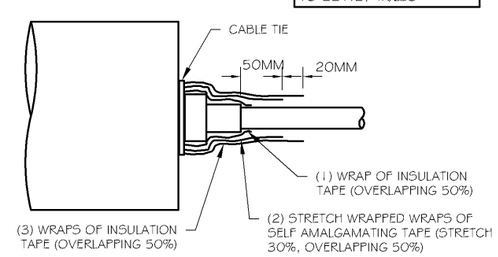

4 CABLE / APPLICATION DETAIL

SCALE: NTS

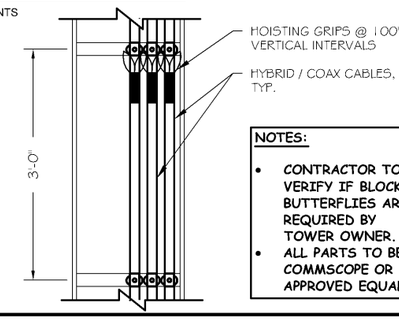

NOTES:

- CONTRACTOR TO VERIFY IF BLOCKS / BUTTERFLIES ARE REQUIRED BY TOWER OWNER.
- ALL PARTS TO BE COMMSCOPE OR APPROVED EQUAL.

5 RF JUMPER MOUNTING DETAIL

SCALE: NTS

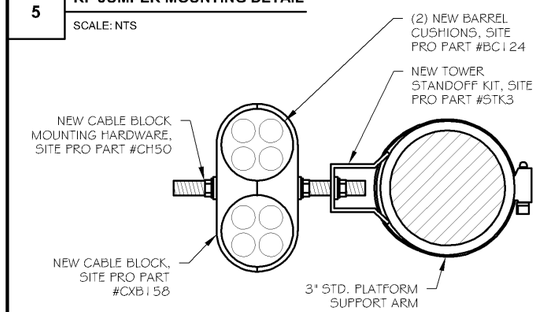

5 CABLE HANGER DETAIL

SCALE: NTS

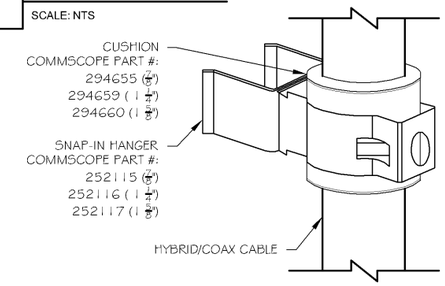

T-Mobile

T-MOBILE USA, INC.
2001 BUTTERFIELD RD.
DOWNERS GROVE, IL 60515

Insite inc.
Real Estate Consulting Services
1S660 MIDWEST RD.
OAKBROOK TERRACE, IL 60181

forge
FORGE SERVICES, INC.
T: (630) 451-9890
1S660 MIDWEST RD. STE. 140
OAKBROOK TERRACE, IL 60181

FORGE PROJECT NO: **8009**
DRAWN BY: **AC**
CHECKED BY: **JL**

REV	DATE	DESCRIPTION
A	06/26/2020	ISSUED FOR REVIEW
0	07/21/2020	ISSUED FOR PERMIT

CONSTRUCT ONLY FROM DRAWINGS MARKED "ISSUED FOR CONSTRUCTION"

FREDERICK Y. BENJAMIN
062-033842
REGISTERED PROFESSIONAL ENGINEER OF ILLINOIS

© 2020 FORGE SERVICES, INC. ALL RIGHTS RESERVED

CH22901A
WESTERN SPRINGS WT

4900 S WILLOW SPRINGS RD.
WESTERN SPRINGS, IL 60558

WATER TOWER

ANTENNA SCHEDULE

RF1.1

THIS DRAWING IS SCALED FOR 11×17 PAPER (U.S. GOVT. "TABLOID")

1 **RFDS**

SCALE: NTS

Section 1 - Site Information

Site ID: CH22901A
Status: Draft
Version: 7
Project Type: Anchor
Approved: Not Approved
Approved By: Not Approved
Last Modified: 6/13/2020 3:24:53 AM
Last Modified By: Tejas.Patel7@t-mobile.com

Site Name: Western Springs WT
Site Class: Watertank
Site Type: Structure Non Building
Plan Year: 2019
Market: CHICAGO IL
Vendor: Nokia
Landlord: Village of Western Springs

Latitude: 41.80271928
Longitude: -87.89152010
Address: 300 48th Street
City, State: Western Springs, IL
Region: CENTRAL

DRAFT

RAN Template: 56772S_SR			AL Template: 56772S_SR	
Sector Count: 3	Antenna Count: 9	Coax Line Count: 0	TMA Count: 0	RRU Count: 6

Sector 1 (Proposed) view from front (Note: the images show view from behind)

Coverage Type	A - Outdoor Macro					
Antenna	1				2	3
Antenna Model	Commscope - FFHH-65C-R3 (Octo)				AAFIA (Active Antenna - Massive MIMO)	AAHF (Active Antenna - Massive MIMO)
Azimuth	0				0	0
M. Tilt	2					
Height	97				97	97
Ports	P1	P2	P3	P4	P5	P6
Active Tech.	L700 L600 N600	L700 L600 N600	G1900 L1900 U1900	G1900 L1900 U1900	L1900 L2100	L2500 N2500
Dark Tech.						
Restricted Tech.						
Decomm. Tech.						
E. Tilt	2	2	2	2	2	
Cables						
TMAs						
Diplexers / Combiners						
Radio						
Sector Equipment						

Sector 2 (Proposed) view from front (Note: the images show view from behind)

Coverage Type	A - Outdoor Macro					
Antenna	1				2	3
Antenna Model	Commscope - FFHH-65C-R3 (Octo)				AAFIA (Active Antenna - Massive MIMO)	AAHF (Active Antenna - Massive MIMO)
Azimuth	120				120	120
M. Tilt	2					
Height	97				97	97
Ports	P1	P2	P3	P4	P5	P6
Active Tech.	L700 L600 N600	L700 L600 N600	L1900 U1900 G1900	L1900 U1900 G1900	L1900 L2100	L2500 N2500
Dark Tech.						
Restricted Tech.						
Decomm. Tech.						
E. Tilt	2	2	2	2	2	
Cables						
TMAs						
Diplexers / Combiners						
Radio						
Sector Equipment						

Sector 3 (Proposed) view from front (Note: the images show view from behind)

Coverage Type	A - Outdoor Macro					
Antenna	1				2	3
Antenna Model	Commscope - FFHH-65C-R3 (Octo)				AAFIA (Active Antenna - Massive MIMO)	AAHF (Active Antenna - Massive MIMO)
Azimuth	240				240	240
M. Tilt	2					
Height	97				97	97
Ports	P1	P2	P3	P4	P5	P6
Active Tech.	L700 L600 N600	L700 L600 N600	U1900 L1900 G1900	U1900 L1900 G1900	L1900 L2100	L2500 N2500
Dark Tech.						
Restricted Tech.						
Decomm. Tech.						
E. Tilt	2	2	2	2	2	
Cables						
TMAs						
Diplexers / Combiners						
Radio						
Sector Equipment						

Proposed RAN Equipment

Template: 56772S_SR

Enclosure	1	2	3	4
Enclosure Type	Generic 600A Site Support Cabinet	Tower Top Mount (Nokia)	Ancillary Equipment (Nokia)	Generic Battery Cabinet for 600A SSC
Baseband	ASIA L1900 L2100 ASIA L700 L600 L1900 ASIK N2500 ASIK N600 ASIB L2500 FSMF G1900 U1900			
Baseband Submodule	ABIA (x 3) L1900 L2100 ABIA L1900 ABIA L700 L600 L1900 ABIL (x 3) N2500 ABIL N600 ABIC (x 3) L2500			
Baseband Subrack	AMIA (x 3)			
Hybrid Cable System			Nokia HCS 2.0 Trunk *Select Length* 175' HCS 2.0 Trunk - 12#6AWG 24 SM FIBER PR 225' HCS 2.0 Trunk - 12#6AWG 24 SM FIBER PR (x 2)	
Junction Box			Nokia HCS 2.0 Tower Junction Box (x 4)	
Power subsystem	Rectifier Shelf *Select size* Breakers *Select size*			Batteries *Select size*
Radio		AHLOA (x 3) L700 L600 N600 AHFIG (x 3) G1900 L1900 U1900		
Transport System	CSR IXRe			

RAN Scope of Work:

Individual HCS trunk to each sector due to restricted pilaster space

06/13/2020:

Existing HCS 2.0 --> 1 AAFIA + 1 AHLOA + 1 AHFIG + 1 Tower JB
Existing HCS 2.0--> 1 AAFIA + 1 AHLOA + 1 AHFIG + 1 Tower JB
Existing HCS 2.0 --> 1 AAFIA + 1 AHLOA + 1 AHFIG + 1 Tower JB
New HCS 2.0 --> 3 AAHF + 1 Tower JB

T-Mobile
T-MOBILE USA, INC.
2001 BUTTERFIELD RD.
DOWNERS GROVE, IL 60515

Insite inc.
Real Estate Consulting Services
1S660 MIDWEST RD.
OAKBROOK TERRACE, IL 60181

forge
FORGE SERVICES, INC.
T: (630) 451-9890
1S660 MIDWEST RD. STE. 140
OAKBROOK TERRACE, IL 60181

FORGE PROJECT NO: **8009**
DRAWN BY: **AC**
CHECKED BY: **JL**

REV	DATE	DESCRIPTION
A	06/26/2020	ISSUED FOR REVIEW
0	07/21/2020	ISSUED FOR PERMIT

CONSTRUCT ONLY FROM DRAWINGS MARKED "ISSUED FOR CONSTRUCTION"

FREDERICK Y. BENJAMIN
062-033842
REGISTERED PROFESSIONAL ENGINEER OF ILLINOIS

© 2020 FORGE SERVICES, INC. ALL RIGHTS RESERVED

CH22901A
WESTERN SPRINGS WT

4900 S WILLOW SPRINGS RD.
WESTERN SPRINGS, IL 60558

WATER TOWER

RFDS

RF2.1

THIS DRAWING IS SCALED FOR 11×17 PAPER (U.S. GOVT. "TABLOID")

1 ANTENNA DETAILS

SCALE: NTS

NOTE:

VERIFY WITH T-MOBILE RFDS, LATEST REVISION IF THIS EQUIPMENT WILL BE USED.

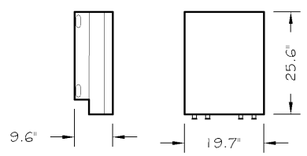

Band	B41 – 2496-2690 MHz	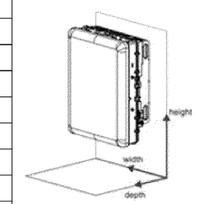
Supported Modulation schemes	(DL) BPSK, QPSK, 16 QAM, 64 QAM, 256 QAM (UL) BPSK, QPSK, 16 QAM, 64 QAM	
No. of ports	32TX32RX and 64TX64RX	
MIMO Streams	16	
Instantaneous IBW	60MHz on Band 41	
Total Avg EIRP	74.8 dBm	
Supported bandwidths	LTE 1.4,3,5,10,15,20 MHz	
Output Power	120W Total (3x40W)	
Power Consumption	850 W typical (ETSI average)	
Optical Ports	3 x QSFP+ (each 4* Gbps CPRI)	
Connector Type	DC -40.5V ... -57V/2 Pole connector	
Installation Options	4.3-10+	
AISG	AISG on all ports, DC on ANT1 and ANT3	
Dimensions (H x W x D)	25.6 x 10.3 x 19.7	
Weight lbs	103.6 lb	
HW/SW Availability	Sept'19 – SRAN19A	
5G NR Support	YES	
Material Description	AAHF AirScale2 Dual RRH 4T4R B25/66 480W	**AAHF 474715A**

NOKIA
AAHF-MASSIVE MIMO

WEIGHT: 103.5 LBS

DIMENSIONS: 25.6"H X 19.7"W X 9.6"D

2 AHFIG DETAILS

SCALE: NTS

NOTE:

VERIFY WITH T-MOBILE RFDS, LATEST REVISION IF THIS EQUIPMENT WILL BE USED.

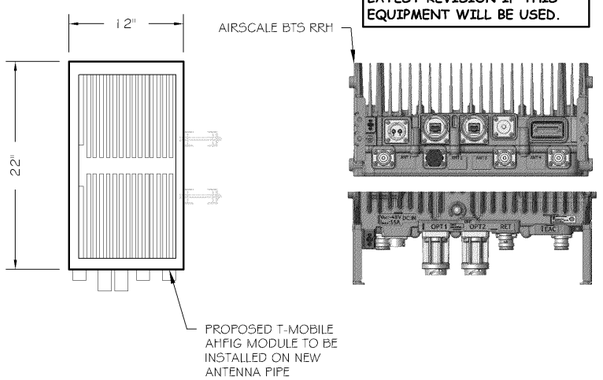

NOKIA - AHFIG
AIRSCALE BTS RRH

WEIGHT: 66.14 LBS. APPROX. W/ NO COVERS OR BRACKETS

DIMENSIONS: 22"H X 12"W X 5.9"D

ANTENNA PORTS: 4 PORTS, 4.3 - 10+

SUPPLY VOLTAGE: DC-48 V

FOR REFERENCE ONLY, SEE MANUF. DRAWINGS

3 TYPICAL RRU UNIT MOUNTING DETAIL

SCALE: NTS

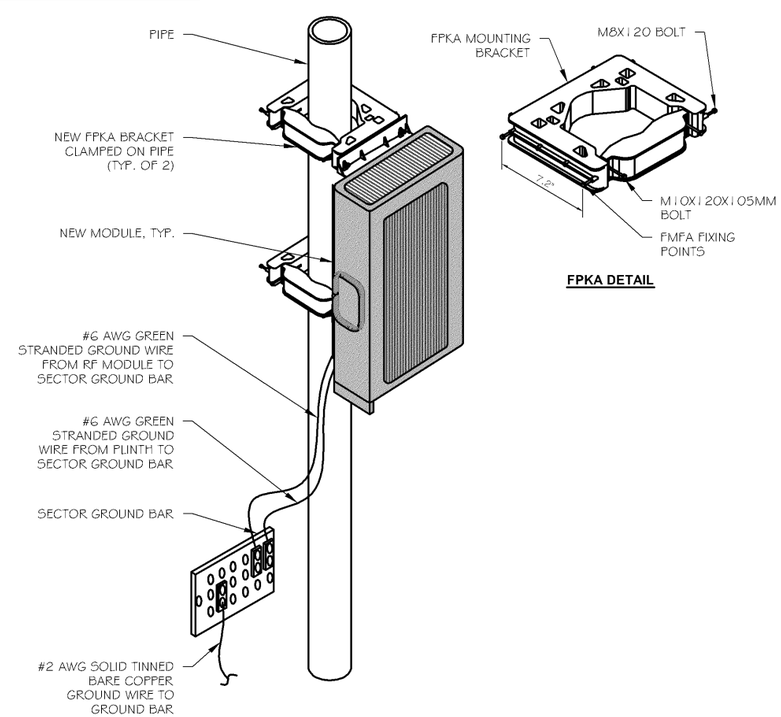

FPKA DETAIL

T-Mobile

T-MOBILE USA, INC.
2001 BUTTERFIELD RD.
DOWNERS GROVE, IL 60515

Insite inc.
Real Estate Consulting Services
1S660 MIDWEST RD.
OAKBROOK TERRACE, IL 60181

forge
FORGE SERVICES, INC.
T: (630) 451-9890
1S660 MIDWEST RD. STE. 140
OAKBROOK TERRACE, IL 60181

FORGE PROJECT NO: **8009**
DRAWN BY: **AC**
CHECKED BY: **JL**

REV	DATE	DESCRIPTION
A	06/26/2020	ISSUED FOR REVIEW
0	07/21/2020	ISSUED FOR PERMIT

CONSTRUCT ONLY FROM DRAWINGS MARKED "ISSUED FOR CONSTRUCTION"

FREDERICK Y. BENJAMIN
062-033842
REGISTERED PROFESSIONAL ENGINEER OF ILLINOIS

© 2020 FORGE SERVICES, INC. ALL RIGHTS RESERVED

CH22901A
WESTERN SPRINGS WT

4900 S WILLOW SPRINGS RD.
WESTERN SPRINGS, IL 60558

WATER TOWER

ANTENNA DETAILS

RF3.1

THIS DRAWING IS SCALED FOR 11×17 PAPER (U.S. GOVT. "TABLOID")

1 **RFDS DIAGRAM**

SCALE: NTS

Configuration 56772S_SR

* For 5G and LTE Airscale BB dimensioning refer to Fiber Port matrices.

(Alpha , Beta & Gamma)

DRAFT

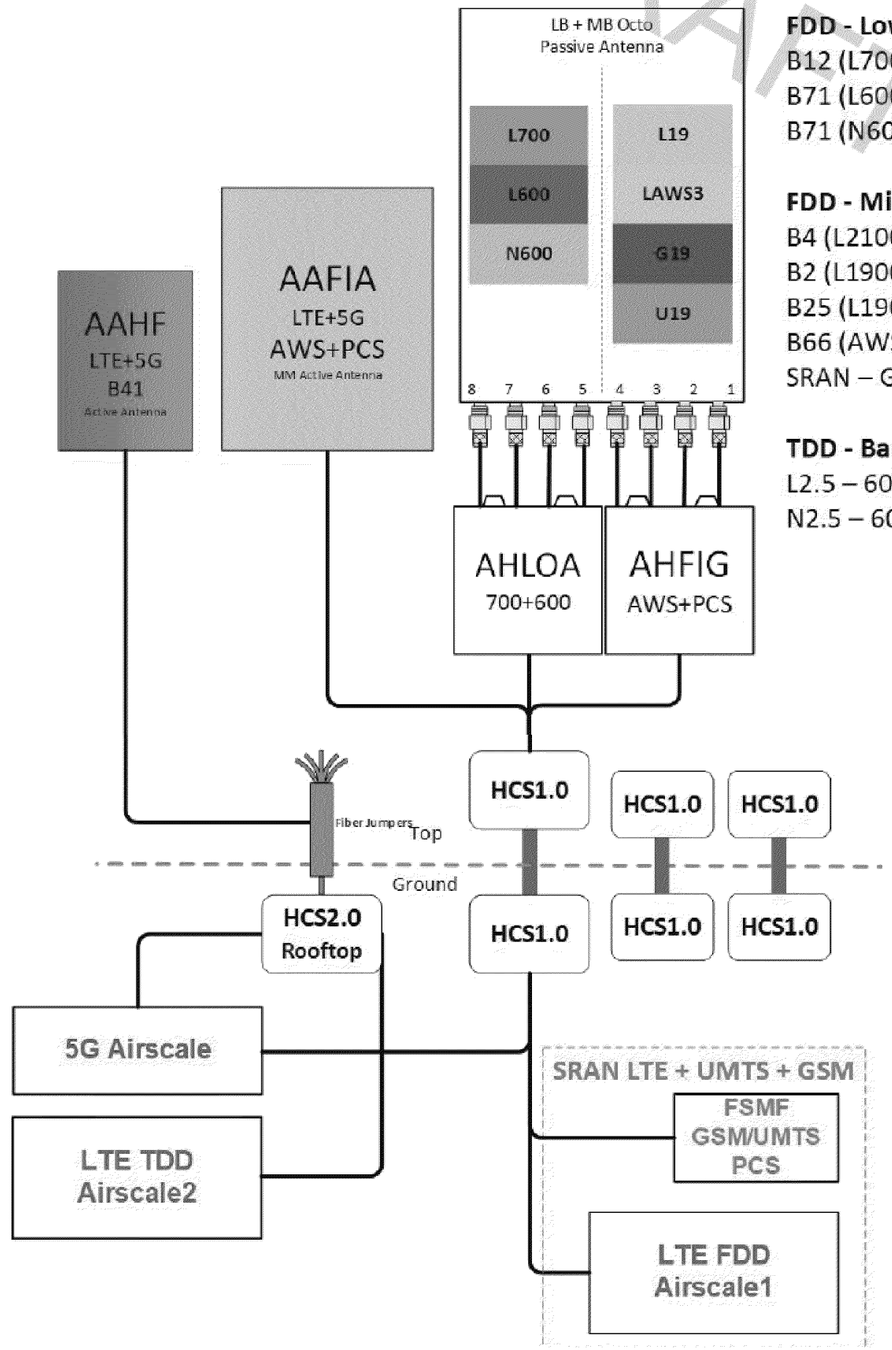

FDD - Lowband

B12 (L700) – 5 MHz

B71 (L600) –10 MHz

B71 (N600) – 10 MHz

FDD - Midband

B4 (L2100) – 20 MHz

B2 (L1900) – 20 MHz

B25 (L1900) – 20 MHz

B66 (AWS3) – 5MHz

SRAN – GSM/UMTS PCS

TDD - Band 41

L2.5 – 60 MHz

N2.5 – 60 MHz

T-Mobile

T-MOBILE USA, INC.
2001 BUTTERFIELD RD.
DOWNERS GROVE, IL 60515

Insite inc.
Real Estate Consulting Services
1S660 MIDWEST RD.
OAKBROOK TERRACE, IL 60181

forge
FORGE SERVICES, INC.
T: (630) 451-9890
1S660 MIDWEST RD. STE. 140
OAKBROOK TERRACE, IL 60181

FORGE PROJECT NO:	8009
DRAWN BY:	AC
CHECKED BY:	JL

REV	DATE	DESCRIPTION
A	06/26/2020	ISSUED FOR REVIEW
0	07/21/2020	ISSUED FOR PERMIT

CONSTRUCT ONLY FROM DRAWINGS MARKED "ISSUED FOR CONSTRUCTION"

FREDERICK Y. BENJAMIN
062-033842
REGISTERED PROFESSIONAL ENGINEER OF ILLINOIS

© 2020 FORGE SERVICES, INC. ALL RIGHTS RESERVED

CH22901A
WESTERN SPRINGS WT

4900 S WILLOW SPRINGS RD.
WESTERN SPRINGS, IL 60558

WATER TOWER

NSN CONFIGURATION DIAGRAM

RF4.1

THIS DRAWING IS SCALED FOR 11×17 PAPER (U.S. GOVT. "TABLOID")

1

TYPICAL GROUNDING RISER DIAGRAM

SCALE: NTS

LEGEND AND KEYNOTES

●	EXOTHERMIC WELD CONNECTION
○	MECHANICAL CONNECTION
	PROPOSED GROUND WIRE (#2 AWG SOLID TINNED)
	PROPOSED GROUND WIRE (#2 AWG GREEN STRANDED)
	EXISTING GROUND WIRE (IF APPLICABLE)
	COAX CABLE

NOTES:

- THIS DRAWING MUST BE USED IN CONJUNCTION WITH GROUNDING PLAN G1.1.
- VERIFY WITH T-MOBILE RFDS, LATEST REVISION IF THESE EQUIPMENT WILL BE USED.

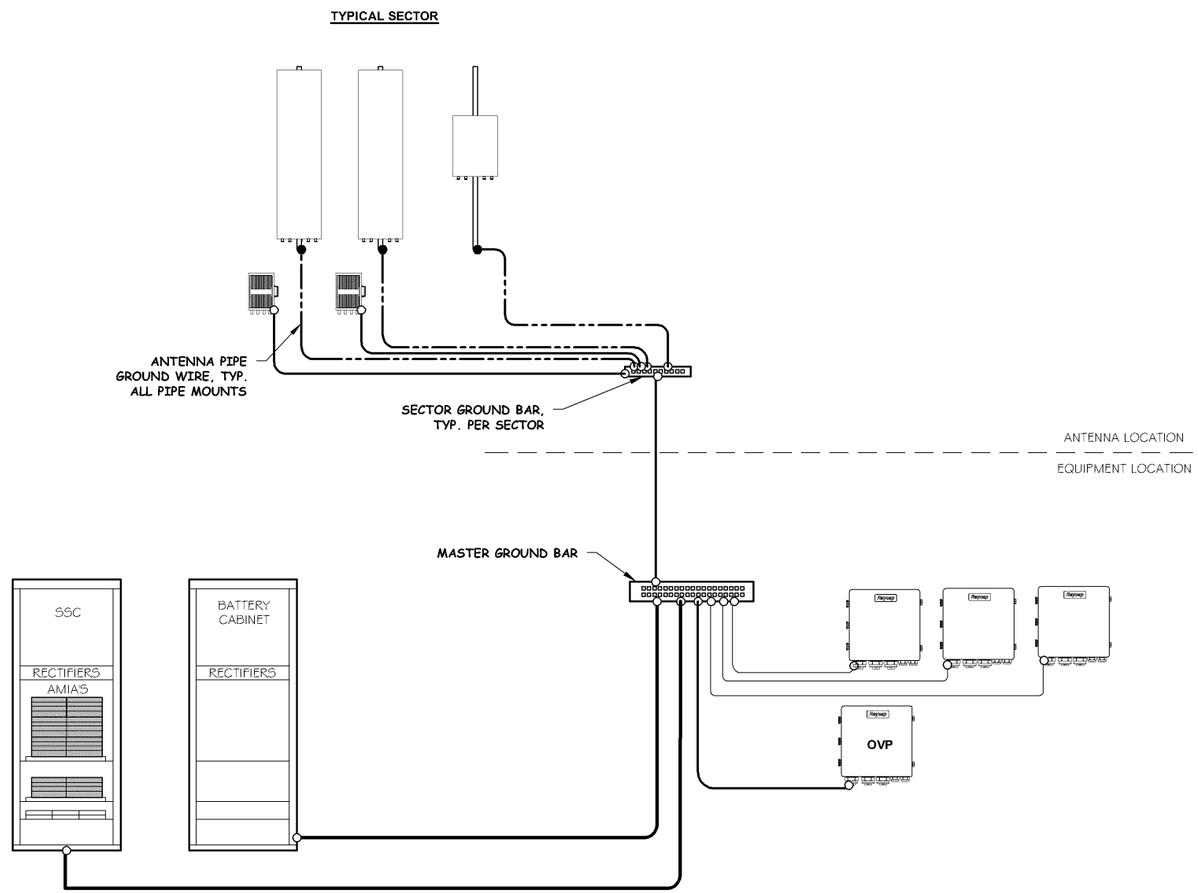

GROUNDING NOTES:

1. GROUNDING BAR MOUNTED ON TOWER FOR ANTENNA GROUNDING REQUIREMENTS. COORDINATE MOUNTING AND LOCATION WITH ANTENNA PLACEMENT.

2. 4/0 AWG GREEN INSULATED CONDUCTOR FROM ANTENNA GROUND BAR TO GROUND BAR MOUNTED AT TOWER BASE ON STRUCTURE.

3. BOND FENCE POST TO GROUND RING AS SHOWN USING EXOTHERMIC WELD. BOND FENCE GATE TO POST WITH A FLEXIBLE COPPER JUMPER STRAP, ERICO #FJ2G24 OR BURNDY TYPE "B", PROVIDE EXOTHERMIC WELDS AND ANY NECESSARY ACCESSORIES TO BOND STRAP TO GATE AND FENCE POST. PROVIDE LENGTH AS REQUIRED TO MAKE CONNECTION.

4. THE CONTRACTOR SHALL LOCATE AND MARK ALL EXISTING UNDERGROUND POWER, TELCO, GROUNDING CONDUITS, AND ALL OTHER UTILITIES EASEMENTS AND/OR WIRES PRIOR TO TRENCHING. ANY DAMAGE CAUSED TO THE EXISTING UNDERGROUND SERVICES OR SYSTEMS SHALL BE REPAIRED AT THE CONTRACTOR'S EXPENSE. VERIFY WITH UTILITY NEW SERVICE HAS BEEN APPLIED FOR. THERE SHALL BE NO SPLICING OF GROUND CONDUCTORS BELOW GRADE.

5. ALL GROUNDING CABLE IN CONCRETE SHALL BE IN PVC OR NON-METALLIC SEAL-TIGHT. NO METALLIC CONDUIT IS TO BE USED FOR GROUNDING CONDUCTOR SLEEVES.

6. DO NOT INSTALL BURIED GROUND RING OUTSIDE OF PROPERTY LINE. NOTIFY THE CONSTRUCTION MANAGER 24 HOURS IN ADVANCE WHEN THE BURIED GROUND RING IS INSTALLED SO THAT A REPRESENTATIVE CAN INSPECT THE GROUND RING BEFORE IT IS BACK FILLED WITH SOIL.

7. ALL EXTERIOR GROUNDING CONDUCTORS SHALL CONFORM TO SECTION 4.1 OF SSEO 3.018.02.004.

8. ALL EXOTHERMIC WELDS TO BURIED GROUND RING SHALL BE THE PARALLEL TYPE, EXCEPT FOR THE GROUND RODS WHICH ARE SPLICE EXOTHERMIC WELDS.

9. ALL CADWELDS SHALL BE COLD GALVANIZED EXCEPT FOR COPPER TO COPPER. REPAIR ALL GALVANIZED SURFACES THAT HAVE BEEN DAMAGED BY EXOTHERMIC WELDING.

10. WHERE MECHANICAL CONNECTORS (TWOHOLE OR CLAMP) ARE USED, APPLY A LIBERAL PROTECTIVE COATING OF KOPRSHIELD OR BURNDY PENETROX-E ANTI-OXIDE COMPOUND ON ALL CONNECTORS. PROVIDE LOCK WASHERS ON ALL MECHANICAL CONNECTORS. NO OTHER ANTIOXIDANT IS ACCEPTABLE. USE STAINLESS STEEL HARDWARE THROUGHOUT. THOROUGHLY REMOVE ALL PAINT AND CLEAN ALL DIRT FROM SURFACES REQUIRING GROUND CONNECTIONS, REPAINT TO MATCH EXISTING AFTER CONNECTION IS MADE TO MAINTAIN CORROSION RESISTANCE. ALL GROUND CONNECTIONS SHALL BE APPROVED FOR THE TYPES OF METALS BEING ATTACHED TO.

11. EXOTHERMICALLY WELD GROUNDING CONDUCTOR TO COMMUNICATION STRUCTURE AT POLE-BASE FLANGE AND BOND TO BURIED GROUND SYSTEM WITHIN A 3/4" FLEXIBLE CONDUIT SLEEVE. VERIFY BEND IS 45 DEGREES FROM GROUND TO POLE.

12. THE TOP OF THE UTILITY METER GROUND ROD SHALL BE 6" ABOVE THE SUB-GRADE OR PER LOCAL JURISDICTION REQUIREMENTS.

13. CONTRACTOR SHALL PERFORM MEG TEST (GROUND RESISTANCE) ON THE GROUNDING SYSTEM. THESE TESTS SHALL BE OBSERVED BY THE CONSTRUCTION MANAGER. GROUND FIELD READING SHALL BE 5 OHMS MAXIMUM, OR ADDITIONAL GROUNDING METHODS APPLIED. SEE SSEO 3.018.10.002.

14. ALL GROUND RODS AND GROUNDING SYSTEM SHALL COMPLY WITH SSEO 3.018.10.002.

15. ALL CONDUCTORS SHALL BE COPPER TYPE THWN INSULATION UNLESS OTHERWISE NOTED.

16. ALL GROUNDING SYSTEM CONDUCTORS AND CONNECTIONS BELOW GRADE SHALL BE THERMAL WELDS AT GROUND RODS AND SHALL BE A MINIMUM OF 30" BELOW GRADE OR 6" BELOW FROST LINE, WHICHEVER IS DEEPER.

17. GROUNDING SHALL BE IN ACCORDANCE WITH THE FOLLOWING T-MOBILE PROJECT NUMBER PRACTICES (AS REQUIRED): R.SSEO 3.018.02.004 BOUNDING, GROUNDING AND TRANSIENT PROTECTION FOR CELL SITES.

18. SSEO 3.018.10.002 SITE RESISTANCE TO EARTH TESTING (3 POINT FALL OF POTENTIAL).

19. REFER TO DETAILS FOR ADDITIONAL INFORMATION AND REQUIREMENTS.

20. A MINIMUM OF 2 TEST RUNS SHALL BE MADE AT 90° (100 FOOT RUNS). TEST RESULTS SHALL BE GIVEN TO THE CONSTRUCTION MANAGER.

21. SEE T-MOBILE STANDARD CONSTRUCTION SPECIFICATION FOR MORE DETAILS.

22. PROVIDE FOR ALL OTHER ADDITIONAL GROUNDING CONNECTIONS WHICH MAY BE REQUIRED AT THE SITE (I.E. FENCES, GATES METAL EQUIPMENT, ELECTRICAL SERVICE SYSTEMS, ETC.) TO COMPLY WITH ALL STAT LOCAL CODES, AND THE NATIONAL ELECTRICAL CODE 2008.

23. ALL GROUNDING CONNECTIONS AND INSTALLATIONS SHALL BE MADE BY ELECTRICAL CONTRACTOR IN ACCORDANCE WITH LOCAL UTILITY REQUIREMENTS AND THE NATIONAL ELECTRICAL CODE 2011.

T-Mobile

T-MOBILE USA, INC.
2001 BUTTERFIELD RD.
DOWNERS GROVE, IL 60515

Insite inc.
Real Estate Consulting Services
1S660 MIDWEST RD.
OAKBROOK TERRACE, IL 60181

forge
FORGE SERVICES, INC.
T: (630) 451-9890
1S660 MIDWEST RD. STE. 140
OAKBROOK TERRACE, IL 60181

FORGE PROJECT NO:	8009
DRAWN BY:	AC
CHECKED BY:	JL

REV	DATE	DESCRIPTION
A	06/26/2020	ISSUED FOR REVIEW
0	07/21/2020	ISSUED FOR PERMIT

CONSTRUCT ONLY FROM DRAWINGS MARKED "ISSUED FOR CONSTRUCTION"

FREDERICK Y. BENJAMIN
062-033842
REGISTERED PROFESSIONAL ENGINEER OF ILLINOIS

© 2020 FORGE SERVICES, INC. ALL RIGHTS RESERVED

CH22901A
WESTERN SPRINGS WT

4900 S WILLOW SPRINGS RD.
WESTERN SPRINGS, IL 60558

WATER TOWER

GROUNDING DIAGRAM

G1.1

THIS DRAWING IS SCALED FOR 11×17 PAPER (U.S. GOVT. "TABLOID")

1 GROUND BUSS BAR DETAIL

SCALE: NTS

NOTES:

- CONFIRM W/ T-MOBILE THE APPROVED BUSS MANUFACTURER.
- NON-OXIDATION COMPOUND TO BE USED BETWEEN ALL METAL SURFACES.
- ALTERNATE EQUALS-COMMSCOPE, ¼"x4"x14" BUSS BAR W/ INSULATED HARDWARE #GB0414IT (CONFIRM W/ T-MOBILE).

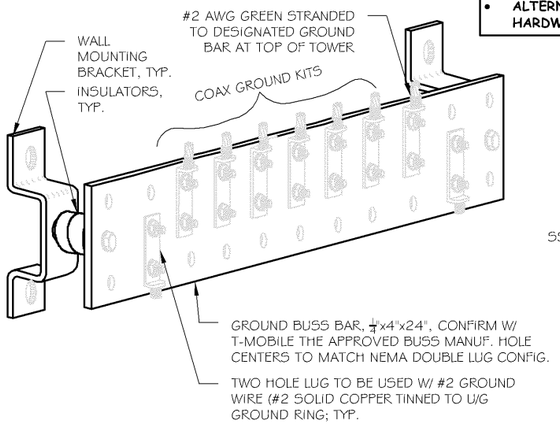

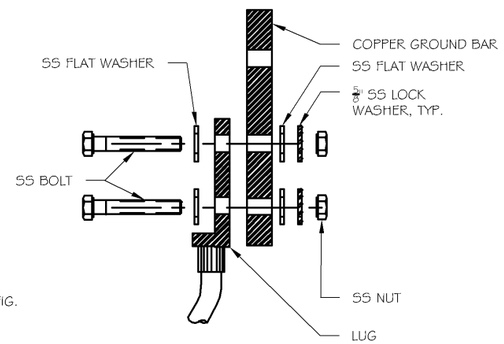

TWO-HOLE LUG CONNECTION DETAIL

2 EXOTHERMIC WELD SCHEDULE

SCALE: NTS

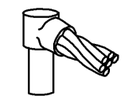

Type GR

SINGLE CABLE TO TOP OF GROUND ROD.

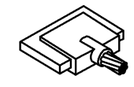

Type LJ

TAP OF CABLE TO EDGE OF HORIZONTAL FLAT BUSBAR.

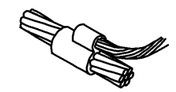

Type PC

PARALLEL TAP CONNECTIONS OF HORIZONTAL CABLES.

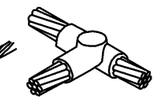

Type TA

TEE CONNECTIONS OF HORIZONTAL RUN AND TAP CABLES.

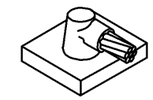

Type HS

HORIZONTAL COPPER CONDUCTOR TO FLAT STEEL SURFACE OR TOP OF HORIZONTAL PIPE.

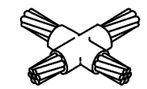

Type XB

CROSS OF HORIZONTAL CABLES LAPPED AND NOT CUT.

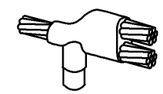

Type NC

THROUGH CABLE PLUS TAP CABLE TO TOP OF GROUND ROD.

Type GT

THROUGH CABLE TO TOP OF GROUND ROD.

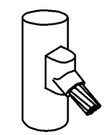

Type VS

CABLE DOWN AT 45º TO RANGE OF STEEL PIPES.

Type VS

CABLE DOWN AT 45º TO VERTICAL STEEL SURFACE.

3 NOT USED

SCALE: NTS

T-Mobile

T-MOBILE USA, INC.
2001 BUTTERFIELD RD.
DOWNERS GROVE, IL 60515

Insite inc.
Real Estate Consulting Services
1S660 MIDWEST RD.
OAKBROOK TERRACE, IL 60181

forge
FORGE SERVICES, INC.
T: (630) 451-9890
1S660 MIDWEST RD. STE. 140
OAKBROOK TERRACE, IL 60181

FORGE PROJECT NO:	8009
DRAWN BY:	AC
CHECKED BY:	JL

REV	DATE	DESCRIPTION
A	06/26/2020	ISSUED FOR REVIEW
0	07/21/2020	ISSUED FOR PERMIT

CONSTRUCT ONLY FROM DRAWINGS MARKED "ISSUED FOR CONSTRUCTION"

FREDERICK Y. BENJAMIN
062-033842
REGISTERED PROFESSIONAL ENGINEER OF ILLINOIS

© 2020 FORGE SERVICES, INC. ALL RIGHTS RESERVED

CH22901A
WESTERN SPRINGS WT

4900 S WILLOW SPRINGS RD.
WESTERN SPRINGS, IL 60558

WATER TOWER

GROUNDING DETAILS

G2.1

THIS DRAWING IS SCALED FOR 11×17 PAPER (U.S. GOVT. "TABLOID")

PART 1 GENERAL

1.01 CARRIER REPRESENTATIVE

A. THE SITE DEVELOPMENT MANAGER (SDM) OR HIS DESIGNEE (INCLUDING BUT NOT LIMITED TO THE ARCHITECT/ENGINEER, OR CONSTRUCTION MANAGER) SHALL SERVE AS THE SINGLE POINT OF CONTACT.
B. BETWEEN THE CONTRACTOR AND OWNER, NOT WITHSTANDING THE REQUIREMENTS SPECIFIED HEREIN, THE SDM OR DESIGNATED REPRESENTATIVE IS EMPOWERED TO DIRECT THE CONTRACTOR TO VARY OR CHANGE FROM THE PLANS AND SPECIFICATIONS AS CIRCUMSTANCES OR CONDITIONS ARISE.
C. CONTRACTOR SHALL VERIFY ALL CHANGES ARE ACCEPTED BY THE ENGINEER OF RECORD.

1.02 INTENT

A. THE DRAWINGS AND SPECIFICATIONS ARE INTENDED TO BE FULLY EXPLANATORY AND COMPLEMENTARY. HOWEVER, SHOULD ANYTHING BE SHOWN, INDICATED OR SPECIFIED ON ONE AND NOT THE OTHER, IT SHALL BE THE SAME AS IF SHOWN, INDICATED OR SPECIFIED IN BOTH.

B. THESE SPECIFICATIONS AND DESIGN DRAWINGS ACCOMPANYING THEM DESCRIBE THE WORK TO BE PERFORMED AND THE MATERIALS TO BE FURNISHED FOR THE CONSTRUCTION OF THE PROJECT.

C. THE INTENTION OF THE DOCUMENTS IS TO INCLUDE ALL LABOR AND MATERIALS REASONABLY NECESSARY FOR THE PROPER EXECUTION AND COMPLETION OF THE WORK AS INDICATED IN THE DOCUMENTS.

D. THE PURPOSE OF THE SPECIFICATIONS IS TO SUPPLEMENT THE INTENT OF THE DRAWINGS AND TO DESIGNATE A PROCEDURE, TYPE, OR QUALITY OF MATERIALS REQUIRED TO COMPLETE THE WORK.

E. MINOR DEVIATIONS FROM THE DESIGN LAYOUT ARE ANTICIPATED AND SHALL BE CONSIDERED AS PART OF THE WORK. HOWEVER, NO CHANGES THAT ALTER THE CHARACTER INTENT OF THE DESIGN WILL BE MADE OR PERMITTED WITHOUT A CHANGE ORDER FROM THE OWNER.

1.03 CONFLICTS

A. THE CONTRACTOR AND EACH SUBCONTRACTOR SHALL BE RESPONSIBLE FOR VERIFICATION OF ALL MEASUREMENTS AT THE SITE BEFORE ORDERING ANY MATERIALS OR PERFORMING ANY WORK. NO EXTRA CHARGE OR COMPENSATION SHALL BE ALLOWED DUE TO DIFFERENCES BETWEEN ACTUAL DIMENSION AND DIMENSIONS INDICATED ON THE CONSTRUCTION DRAWINGS. ANY SUCH DISCREPANCY IN DIMENSIONS WHICH MAY INADVERTENTLY OCCUR SHALL BE SUBMITTED TO THE SDM OR DESIGNATED REPRESENTATIVES FOR CONSIDERATION BEFORE THE CONTRACTOR PROCEEDS WITH WORK IN THE AFFECTED AREAS.

B. THE CONTRACTOR, IF AWARDED THE CONTRACT, WILL NOT BE ALLOWED ANY EXTRA COMPENSATION BY REASON OF ANY MATTER OR THING WHICH THE CONTRACTOR MIGHT NOT HAVE FULLY INFORMED HIMSELF PRIOR TO BIDDING.

C. NO PLEA OF IGNORANCE OF CONDITIONS THAT EXIST, OR OF DIFFICULTIES THAT MAY BE ENCOUNTERED OR OF ANY OTHER RELEVANT MATTER CONCERNING THE WORK TO BE PERFORMED WILL BE ACCEPTED AS A REASON FOR ANY FAILURE OR OMISSION ON THE PART OF THE CONTRACTOR TO FULFILL THE REQUIREMENTS OF THE CONTACT DOCUMENTS.

1.04 BIDDING PROCESS -- INSTRUCTIONS TO BIDDERS

A. CARRIER REQUESTS A FIRM LUMP SUM BID FOR ALL WORK DESCRIBED IN THE CONTRACT, AS INDICATED IN THESE CONSTRUCTION DRAWINGS/SPECIFICATIONS, APPARENT WITH FIELD VISIT, AND ACCORDING TO ANY OTHER AGREEMENTS AND DIRECTION.

B. BIDDER WILL GUARANTEE BIDS FOR 60 DAYS FROM BID DUE DATE. BIDS SHALL INCLUDE ALL APPLICABLE STATE AND FEDERAL TAXES.

D. PROPOSAL: (AS OUTLINED IN BID DOCUMENTS) IT IS UNDERSTOOD BY OWNER, THAT THE BIDDER IN SUBMITTING HIS BID, WARRANTS THAT HE HAS:

A. CAREFULLY EXAMINED THE SITE OF THE PROJECT TO ACQUAINT HIMSELF WITH:
1) SURROUNDING PROPERTIES.
2) MEANS OF APPROACH TO THE SITE.
3) CONDITIONS OF THE ACTUAL JOB SITE.
4) FACILITIES FOR DELIVERING, STORING, PLACING, HANDLING AND REMOVAL OF MATERIALS AND EQUIPMENT.
5) ANY AND ALL DIFFICULTIES THAT MAY BE ENCOUNTERED DURING THE EXECUTION OF ALL WORK IN ACCORD WITH THE CONTRACT DOCUMENTS.

1.05 CONTRACTS AND WARRANTIES

A. ABBREVIATED FORM OF AGREEMENT BETWEEN CARRIER REPRESENTATIVE AND CONTRACTOR MAY BE USED AND WILL BE EMPLOYED FOR CONTRACT PURPOSES.
B. UNLESS ARRANGED OTHERWISE, EACH CONTRACTOR IS RESPONSIBLE FOR FILING THE BUILDING PERMIT AT THE LOCAL JURISDICTION AS THE CONTRACTOR OF RECORD, AND PROVIDE JURISDICTION WITH ALL PROOF REQUIRED TO OPERATE AS A CONTRACTOR IN THAT JURISDICTION.
C. THE CONTRACTOR SHALL BE REIMBURSED, AT FACE VALUE, FOR THE AMOUNT OF ANY FEE PAID AS FOLLOWS:
1. PLAN REVIEW FEE.
2. BUILDING PERMIT FEE.
3. CONNECTIONS AND INSPECTION FEES.
EACH CONTRACTOR IS RESPONSIBLE FOR APPLICATION & PAYMENT OF CONTRACTOR LICENSES & BONDS.

1.06 STORAGE

A. DO NOT USE THE CARRIER EQUIPMENT SPACE FOR STORAGE OF TOOLS OR MATERIALS WITHOUT WRITTEN SDM APPROVAL.

B. ALL MATERIALS MUST BE STORED IN A LEVEL AND DRY LOCATION AND IN A MANNER THAT WILL NOT OBSTRUCT THE FLOW OF OTHER WORK. ANY EQUIPMENT OR MATERIAL STORAGE METHOD MUST MEET ALL RECOMMENDATIONS OF THE MANUFACTURER.

1.07 PROTECTION

A. PROTECT FINISHED SURFACES, INCLUDING JAMBS AND WALLS USED AS PASSAGEWAYS THROUGH WHICH EQUIPMENT AND MATERIALS WILL PASS.

B. PROVIDE PROTECTION FOR EQUIPMENT ROOM SURFACES PRIOR TO ALLOWING EQUIPMENT OR MATERIAL TO BE MOVED OVER SUCH SURFACES.

C. MAINTAIN FINISHED SURFACES CLEAN, UNMARRED AND SUITABLY PROTECTED UNTIL JOB SITE IS ACCEPTED BY THE SDM.

1.08 REPAIRS AND REPLACEMENTS

A. IN EVENT OF DAMAGES, THE CONTRACTOR SHALL NOTIFY OWNER SDM, THEN PROMPTLY MAKE ALL REPLACEMENTS AND REPAIRS AT NO ADDITIONAL COST TO OWNER.

B. ADDITIONAL TIME THAT IS REQUIRED TO SECURE REPLACEMENTS AND TO MAKE REPAIRS WILL NOT BE CONSIDERED BY OWNER TO JUSTIFY EXTENSION IN THE CONTRACT TIME FOR COMPLETION.

1.09 TEMPORARY FACILITIES

A. WATER: WATER IS NOT AVAILABLE TO THE CONTRACTORS ON SITE.

A. LIGHT AND POWER:
1. LIGHT AND POWER ARE AVAILABLE ON SITE.
2. TELEPHONE:
3. EACH CONTRACTOR TO PROVIDE HIS OWN TELEPHONE ACCESS IF REQUIRED.
4. CONTRACTORS ARE NOT TO USE OWNER PHONES.

B. IF PERMANENT POWER IS COMPLETED, ALL CONTRACTORS MAY USE THE SERVICE CONNECTION FOR PRODUCTION WORK ONLY, PROVIDED THAT ELECTRICAL CORDS AND CONNECTIONS ARE FINISHED BY CONTRACTORS AND ARE DISCONNECTED AND PROPERLY STORED DURING NON-WORKING HOURS.

1.10 CLEAN UP

A. THE CONTRACTOR SHALL AT ALL TIMES KEEP THE SITE FREE FROM ACCUMULATION OF WASTE MATERIALS OR RUBBISH CAUSED BY THEIR EMPLOYEES AT WORK, AND AT THE COMPLETION OF THE WORK, THEY SHALL REMOVE ALL RUBBISH FROM AND ABOUT THE BUILDING, INCLUDING ALL TOOLS, SCAFFOLDING AND SURPLUS MATERIALS, AND SHALL LEAVE THE WORK AREA CLEAN AND READY FOR USE

B. EXTERIOR: VISUALLY INSPECT EXTERIOR SURFACES AND REMOVE ALL TRACES OF SOIL, WASTE MATERIAL, DUST, SMUDGES, AND OTHER FOREIGN MATTER.

1. REMOVE ALL TRACES OF SPLASHED MATERIALS FROM ADJACENT SURFACES.
2. IF NECESSARY TO ACHIEVE A UNIFORM DEGREE OF CLEANLINESS, HOSE DOWN THE EXTERIOR OF THE STRUCTURE.

C. INTERIOR: VISUALLY INSPECT INTERIOR SURFACES AND REMOVE ALL TRACES OF SOIL, WASTE MATERIAL, SMUDGES AND OTHER FOREIGN MATTER.

1. REMOVE ALL TRACES OF SPLASHED MATERIALS FROM ADJACENT SURFACES.
2. REMOVE PAINT DROPPINGS, SPOTS, STAINS AND DIRT FROM FINISHED SURFACES.

D. CONTRACTOR SHALL WASH AND WAX FLOOR PRIOR TO FINAL ACCEPTANCE FROM SDM. WAX SHALL BE THE ANTI-STATIC TYPE.

1.11 CHANGE ORDER PROCEDURE
A. CHANGE ORDER MAY BE INITIATED BY THE SDM, AND OR THE CONTRACTOR. THE CONTRACTOR, UPON VERBAL REQUEST FROM THE SDM, SHALL PREPARE WRITTEN PROPOSAL DESCRIBING THE CHANGE IN WORK OR MATERIALS AND ANY CHANGES IN THE CONTRACT AMOUNT AND PRESENT IT TO THE SDM FOR APPROVAL. SUBMIT REQUESTS FOR SUBSTITUTIONS IN THE FORM AND IN ACCORDANCE WITH PROCEDURES REQUIRED FOR CHANGE ORDER PROPOSALS. ANY CHANGES IN THE SCOPES OF WORK OR MATERIALS WHICH ARE PERFORMED BY THE CONTRACTOR WITHOUT A WRITTEN CHANGE ORDER AS DESCRIBED AND APPROVED BY THE SDM SHALL BECOME THE SOLE RESPONSIBILITY OF THE CONTRACTOR

1.12 RELATED DOCUMENTS AND COORDINATION
A. GENERAL CARPENTRY, ELECTRICAL AND ANTENNA DRAWINGS ARE INTERRELATED. IN PERFORMANCES OF THE WORK EACH CONTRACTOR JUST REFERS ALL DRAWINGS. ALL COORDINATION TO BE THE RESPONSIBILITY OF THE GENERAL CONTRACTOR

1.13 SHOP DRAWINGS

A. CONTRACTOR TO SUBMIT SHOP DRAWINGS AS REQUIRED AND LISTED IN THESE SPECIFICATIONS AND THROUGH THE GENERAL CONTRACT TO THE SDM FOR APPROVAL.
B. SHOP DRAWINGS FOR ALL STRUCTURAL STEEL SHALL BE SUBMITTED TO THE ENGINEER OF RECORD UNLESS SPECIFICALLY NOTED OTHERWISE; CONTRACTOR SHALL NOT FABRICATE STEEL UNTIL DRAWINGS HAVE BEEN ACCEPTED IN WRITING
C. ALL SHOP DRAWINGS TO BE REVISED, CHECKED AND CORRECTED BY GENERAL CONTRACTOR PRIOR TO SUBMITTAL TO THE SDM

1.14 PRODUCTS AND SUBSTITUTIONS

A. SUBMIT 3 COPIES OF EACH REQUEST FOR SUBMISSION. IN EACH REQUEST IDENTIFY THE PRODUCT FABRICATION OR INSTALLATION METHOD TO BE REPLACED BY THE SUBSTITUTION. INCLUDE RELATED INSPECTIONS AND DRAWING NUMBERS, AND COMPLETE DOCUMENTATION SHOWING COMPLIANCE WITH THE REQUIREMENTS FOR SUBSTITUTIONS.

B. ALL NECESSARY PRODUCT DATA AND CUT SHEETS SHOULD PROPERLY INDICATES AND DESCRIBE ITEMS, PRODUCTS AND MATERIALS BEING INSTALLED. THE CONTRACTOR SHALL, IF DEEMED NECESSARY BY THE SDM, SUBMIT ACTUAL SAMPLES TO THE SDM FOR APPROVAL IN LIEU OF CUT SHEETS.

1.15 COMPLIANCE

A. ALL MATERIALS, DESIGN AND WORKMANSHIP SHALL BE IN ACCORDANCE WITH ALL APPLICABLE CODES (SOME ARE LISTED HEREIN) ORDINANCES, AND AUTHORITIES HAVING JURISDICTION OVER THE WORK. UPON THE COMPLETION OF THE WORK, THE CONTRACTOR SHALL PROVIDE CARRIER WITH THE CERTIFICATES OF OCCUPANCY (IF REQUIRED), JOB SITE PERMITTED PLANS AND INSPECTION CARD WITH ALL FINAL INSPECTION SIGNATURES AND OTHER LEGAL DOCUMENTS TO VERIFY SUCH COMPLIANCES. WHERE NO CODES EXIST, THE WORK SHALL CONFORM TO THE UNIFORM BUILDING CODE AND/OR THE SPECIFICATIONS HEREIN, WHICHEVER IS MORE STRINGENT AND A DOCUMENT STATEMENT SHALL BE FURNISHED TO THIS EFFECT.

B. IT IS THE CONTRACTOR'S RESPONSIBILITY TO VERIFY COMPLIANCE WITH THE GOVERNING CODES AND TO NOTIFY THE SDM OF ANY DISCREPANCIES PRIOR TO PERFORMING WORK.

C. REFERENCES TO ANY STANDARD OR CODE OF PRACTICES IN THIS SPECIFICATION SHALL BE DEEMED TO MEAN THE EDITION CURRENT AT THE TIME OF AWARD OF THE CONTRACT.

D. THE CONTRACTOR SHALL COMPLY WITH ALL ZONING AND SITE ACQUISITION SPECIAL STIPULATIONS AS OUTLINED IN THE JOB SPECIFICATIONS, OR AS DIRECTED BY THE SDM.

1. ANSI/TIA - 222 - G
2. INTERNATIONAL BUILDING CODE (IBC)
3. NATIONAL ELECTRICAL CODE (NEC) WITH ALL AMENDMENTS
4. AMERICAN INSTITUTE FOR STEEL CONSTRUCTION OR SPECIFICATIONS (AISC)
5. LIFE SAFETY CODE NFPA - 101
6. FEDERAL AVIATION REGULATIONS

E. CONTRACT COMPANIES AND THEIR EMPLOYEES SHALL OBSERVE AND PRACTICE ALL OSHA SAFETY GUIDELINES WHILE PERFORMING SERVICE.

F. TOWER PLATFORM AND ANTENNA INSTALLATION SHALL BE CONDUCTED BY FIELD CREWS EXPERIENCED IN THE ASSEMBLY AND ERECTION OF RADIO ANTENNAS, TRANSMISSION LINES AND SUPPORT STRUCTURES.

G. WHERE A TOWER DOES NOT HAVE A PERMANENT FALL PROTECTION SYSTEM, THE CONTRACT COMPANY IS RESPONSIBLE FOR PROVIDING A SUITABLE SYSTEM FOR ITS EMPLOYEES.

H. GENERAL CONTRACTOR WILL HAVE A QUALIFIED PERSON WITH TOOLS AT THE TIME OF INSTALLATION OF EQUIPMENT.

1.16 ADMINISTRATION
A. THE CONTRACTOR SHALL FURNISH TO THE SDM WITH THE NAME AND CONTACT TELEPHONE NUMBERS (MOBILE, PAGER AND RESIDENCE NOTE) OF THE CARRIER APPROVED ON-SITE SUPERVISOR. ANY CHANGES IN SUPERVISION MUST BE REPORTED TO THE SDM IMMEDIATELY AND ARE SUBJECT TO CARRIER APPROVAL.

1.17 PERMIT AND LICENSES
A. THE CONTRACTOR SHALL OBTAIN, AT HIS OWN EXPENSE, ALL REQUIRED LOCAL, STATE, AND/OR COUNTY CONSTRUCTION PERMITS AND LICENSES. COPIES OF ALL PERMITS SHALL BE SENT TO SDM. APPROVALS FROM RELEVANT PLANNING BOARD, ENVIRONMENTAL BOARDS, AND/OR OTHER COMMITTEE WILL BE SUPPLIED BY OTHERS, BUT MUST BE CONFIRMED BY THE CONTRACTOR WITH THE SDM PRIOR TO THE APPLICATION FOR CONSTRUCTION PREMISES.

B. FAA APPROVAL WILL BE SUPPLIED BY OTHERS BUT MUST BE CONFIRMED BY THE CONTRACTOR WITH THE SDM PRIOR TO THE ERECTING OF TOWER (IF APPLICABLE).

C. FOR CONSTRUCTION SCHEDULING REFER TO THE INSTRUCTIONS PROVIDED BY THE SDM ITEMS TO BE INCLUDED:
1. CLEARING AND GRUBBING
2. BUILDING PERMIT
3. SHELTER DELIVERY AND PLACEMENT
4. BUILDING FOUNDATION EXCAVATION
5. ACCESS ROAD
6. COMMERCIAL AC POWER
7. BUILDING FOUNDATION FORMING
8. INSPECTIONS
9. LANDSCAPING
10. GROUNDING SYSTEM
11. ANTENNA INSTALLATION

D. PRIOR TO COMMENCING THE WORK THE GENERAL CONTRACTOR SHALL SCHEDULE AN ON-SITE MEETING WITH ALL MAJOR PARTIES TO THE PROCESS. THIS WOULD INCLUDE (THOUGH NOT LIMITED TO) THE DESIGNATED REPRESENTATIVES OF EACH SUB-CONTRACTOR

E. CONTRACTOR SHALL FIELD VERIFY ALL EXISTING UTILITIES BOTH HORIZONTALLY & VERTICALLY PRIOR TO START OF CONSTRUCTION. ANY DISCREPANCIES OR QUESTIONS AS TO THE INTERPRETATION OF PLANS SHOULD BE IMMEDIATELY REPORTED TO THE ARCHITECT/ENGINEER FOR RESOLUTION & INSTRUCTION, AND NO FURTHER WORK SHALL BE PERFORMED UNTIL DISCREPANCY IS CHECKED & CORRECTED BY THE ARCHITECT/ENGINEER. FAILURE TO SECURE SUCH INSTRUCTION MEANS CONTRACTOR WILL HAVE WORKED AT HIS OWN RISK AND EXPENSES. CONTRACTOR SHALL CALL ALL APPROPRIATE UTILITY COMPANIES 48 HOURS PRIOR TO START OF CONSTRUCTION TO HAVE UNDERGROUND UTILITIES LOCATED & MARKED.

F. THE CONTRACTOR SHALL BE EQUIPPED WITH A MEANS OF CONSTANT COMMUNICATIONS, SUCH AS A CELLULAR PHONE, AND BE AVAILABLE IN A REASONABLE AMOUNT OF TIME TO TAKE DIRECTION FROM THE SDM.

G. THE CONTRACTOR IS RESPONSIBLE FOR ALL SAFETY INCLUDING BUT NOT LIMITED TO PROTECTION OF ALL SITE PERSONNEL AND THE GENERAL PUBLIC DURING THE ENTIRE SITE CONSTRUCTION PERIOD. HE SHALL TAKE ALL REASONABLE PRECAUTIONS TO PLACE AND MAINTAIN BARRICADES, LAMPS, SIGNS, AND THE LIKE IN ACCORDANCE WITH OSHA SAFETY ACT AND ANSI OCCUPATIONAL GUIDELINES.

T-Mobile

T-MOBILE USA, INC.
2001 BUTTERFIELD RD.
DOWNERS GROVE, IL 60515

Insite inc.
Real Estate Consulting Services
15660 MIDWEST RD.
OAKBROOK TERRACE, IL 60181

forge
FORGE SERVICES, INC.
T: (630) 451-9890
15660 MIDWEST RD. STE. 140
OAKBROOK TERRACE, IL 60181

FORGE PROJECT NO: **8009**
DRAWN BY: **AC**
CHECKED BY: **JL**

REV	DATE	DESCRIPTION
A	06/26/2020	ISSUED FOR REVIEW
0	07/21/2020	ISSUED FOR PERMIT

CONSTRUCT ONLY FROM DRAWINGS MARKED "ISSUED FOR CONSTRUCTION"

FREDERICK Y. BENJAMIN
062-033842
REGISTERED PROFESSIONAL ENGINEER OF ILLINOIS

© 2020 FORGE SERVICES, INC. ALL RIGHTS RESERVED

CH22901A
WESTERN SPRINGS WT

4900 S WILLOW SPRINGS RD.
WESTERN SPRINGS, IL 60558

WATER TOWER

GENERAL NOTES

GN1.1

THIS DRAWING IS SCALED FOR 11×17 PAPER (U.S. GOVT. "TABLOID")

H. PROVIDE DAILY UPDATES ON SITE PROGRESS, EITHER VERBAL OR WRITTEN TO SDM.

I. COMPLETE INVENTORY OF CONSTRUCTION MATERIALS AND EQUIPMENT IS REQUIRED PRIOR TO START OF CONSTRUCTION.

J. SDM SHALL BE NOTIFIED NO LESS THAN 48 HOURS IN ADVANCE OF CONCRETE POURS AND SHELTER PLACEMENTS.

1.18 NOTICES UNDER THE CONTRACT:
A. ALL NOTICES, APPLICATIONS, INSTRUCTIONS AND REQUESTS TO BE GIVEN TO THE CONTRACTOR UNDER THE CONTRACT MAY BE GIVEN VERBALLY OR IN WRITING. AT HIS OWN DISCRETION, THE CONTRACTOR SHALL FORWARD TO THE SDM A LETTER CONFORMING HIS VERBAL AGREEMENT.

1.19 COORDINATION WITH PUBLIC UTILITY COMPANIES:
A. THE CONTRACTOR SHALL COORDINATE WITH RELEVANT COMPANIES THE WORK WHICH IS TO BE CARRIED OUT. CONTRACTOR SHALL CONDUCT HIS OPERATIONS SO AS NOT TO INTERFERE WITH THE OPERATIONS OF PUBLIC AND/OR PRIVATE UTILITY AUTHORITIES INSTALLING SERVICES ON THE SITE.

B. THE CONTRACTOR WILL BE RESPONSIBLE FOR THE PROTECTION OF SUCH FACILITIES AND STRUCTURES DURING CONSTRUCTION OF THE SITE.

1.20 USE OF PUBLIC ROADS AND TRAFFIC CONTROL:
A. THE CONTRACTOR SHALL MAINTAIN ALL ROADS FREE OF ANY EARTH, ROCK OR OTHER MATERIAL THAT MAY FALL FROM HIS EQUIPMENT OR OTHERWISE BE DEPOSITED ON THE ROADS. ALL SUCH MATERIAL DEPOSITED ON THE ROADS SHALL BE PROMPTLY REMOVED AND THE ROAD CLEANED TO THE SATISFACTION OF THE RELEVANT AUTHORITY.

B. ANY DAMAGE TO PUBLIC ROAD CAUSED BY THE CONTRACTOR SHALL BE REPAIRED BY THE CONTRACTOR TO THE SATISFACTION OF THE RELEVANT AUTHORITY AND SDM.

C. THE CONTRACTOR IS TO ARRANGE HIS USE OF PUBLIC AND PRIVATE ROADS IN ACCORDANCE WITH THE RELEVANT AUTHORITY'S REQUIREMENTS. HE SHALL MAKE DUE ALLOWANCES FOR ANY RESTRICTIONS THAT MAY BE APPLICABLE. THIS INCLUDES, BUT IS NOT LIMITED TO, LANE CLOSINGS FOR STAGING CRANES, SPECIAL ESCORTS FOR CONTRACTOR FURNISHED MATERIALS, PUBLIC TRAFFIC CONTROL FOR INGRESS OR EGRESS OF CONSTRUCTION TRAFFIC, AND PROVISION OF ANY REQUIRED TEMPORARY CONSTRUCTION ACCESS.

D. THE CONTRACTOR SHALL MAKE ALLOWANCES FOR THE PROCEDURES AND ITEMS NECESSARY TO MAINTAIN NORMAL TRAFFIC FLOW, TO A STANDARD ACCEPTABLE TO THE RELEVANT AUTHORITIES. THIS INCLUDES, BUT IS NOT LIMITED TO, STEEL PLATES, BARRICADES, LIGHTING AND TRAFFIC DIRECTIONS.

1.21 INSPECTIONS:
A. THE CONTRACTOR SHALL NOTIFY THE SDM AT LEAST 48 HOURS IN ADVANCE OF REQUIRED JURISDICTIONAL INSPECTIONS AND INSPECTIONS THAT WILL BE REQUIRED BY THE SDM OR OTHER DESIGNATED CARRIER REPRESENTATIVE ARE:
1. INSPECTION OF GROUNDING SYSTEM PRIOR TO COVER UP
2. PRACTICAL COMPLETION

B. THE CONTRACTOR SHALL BE SOLELY RESPONSIBLE FOR ENSURING THAT ALL RELEVANT AUTHORITY INSPECTIONS ARE CARRIED OUT IN A TIMELY MANNER. THE CONTRACTOR SHALL PROVIDE DOCUMENTATION OF ALL INSPECTIONS.

C. THE CONTRACTOR IS RESPONSIBLE FOR COORDINATING WITH CARRIER' DESIGNATED ENGINEERING FIRM TO OBTAIN ALL REQUIRED INSPECTIONS AND TESTING. REQUIRED INSPECTIONS AND/OR TESTING ARE:
1. SOIL BEARING CAPACITY
2. BUILDING FOUNDATION REINFORCING
3. CONCRETE CYLINDER TESTS, SLUMP TEST AIR CONTENT, BATCH TICKETS
4. CONCRETE PLACEMENT

1.22 EXPLOSIVES AND DISTURBANCES:
A. THE USE OF EXPLOSIVES OR OTHER DEVICES WHICH MAY DISTURB LOCAL RESIDENCES WILL NOT BE PERMITTED WITHOUT PRIOR WRITTEN CONSENT FROM THE SDM, AND WRITTEN CONSENT OF THE PROPERTY OWNER. WHEN APPROVED BY THE SDM, WORK OF THIS TYPE SHALL BE CARRIED OUT IN STRICT ACCORDANCE WITH THE REGULATIONS OF ALL AUTHORITIES HAVING JURISDICTION OVER THE WORK. PROPERTY OWNERS LIKELY AFFECTED BY THE WORK SHALL BE NOTIFIED IN ADVANCE, IN WRITING. ALL SUCH NOTIFICATIONS SHALL BE COPIED TO THE SDM. CONTRACTOR RESPONSIBLE FOR ANY AND ALL CLAIMS AS A RESULT OF THESE ACTIVITIES.

1.23 ENVIRONMENTAL PROTECTION:
A. NOISE LEVEL: THE CONTRACTOR SHALL ENSURE THAT STATE AND LOCAL REGULATIONS ARE COMPLIED WITH IN REGARD TO NOISE LEVELS PRODUCED BY HIS OR HIS SUBCONTRACTOR'S EQUIPMENT OR METHODS OF CONSTRUCTION.

B. DUST CONTROL: THE CONTRACTOR SHALL TAKE ALL NECESSARY STEPS TO LIMIT THE CREATION OF ANY DUST NUISANCE THAT MIGHT ARISE DURING CONSTRUCTION TO THE SATISFACTION OF THE LOCAL AUTHORITIES AND THE PROPERTY OWNER. IF NECESSARY, THE CONTRACTOR SHALL REGULARLY WATER ALL TRACKS AND CONSTRUCTION AREAS. THE SDM MAY DIRECT THAT WORK CEASE UNTIL SUCH TIME AS ANY PARTICULAR DUST NUISANCE IS CONTROLLED TO THE SATISFACTION OF THE SDM, LOCAL AUTHORITIES, AND PROPERTY OWNERS.

C. PRESERVATION OF TRESS AND SHRUBS: THE CONTRACTOR AND HIS EMPLOYEES AND SUBCONTRACTORS SHALL REFRAIN FROM DESTROYING, REMOVING, OR CLEARING TREES AND SHRUBS UNLESS SPECIFICALLY REQUIRED ON THE CONSTRUCTION PLANS OR APPROVED BY THE SDM.

1.24 REINSTATEMENT:
A. ANY PAVEMENT, FOOTPATH, CURB, GUTTERS, WALLS, FLOORS, SERVICES, AND EXISTING FEATURES OR OTHER PROPERTIES, DISTURBED OR DESTROYED DURING CONSTRUCTION SHALL BE REINSTATED TO A CONDITION AT LEAST EQUAL TO THAT EXISTING BEFORE COMMENCEMENT OF OPERATIONS.

1.25 AS-BUILTS DRAWINGS:
A. THE CONTRACTOR SHALL PREPARE A RED LINED SET OF AS-BUILT DRAWINGS. THE FORM OF MARKED UP CONSTRUCTION PLANS SHALL BE OF A STANDARD ACCEPTABLE TO THE SDM. SUCH DRAWINGS SHALL BE SUBMITTED TO THE SDM (TOTAL OF THREE (3) COPIES OF AS-BUILTS) WITHIN ONE WEEK FROM PRACTICAL COMPLETION AND PRIOR TO APPROVAL OF THE CONTRACTOR'S FINAL INVOICE.

1.26 PRACTICAL COMPLETION:
A. DOCUMENTATION BY CARRIER BEFORE COMPLETION CAN BE ISSUED INCLUDE:
1. ALL CONCRETE TEST RESULTS ARE OUTLINED IN THESE SPECIFICATIONS
2. ALL QUALITY ASSURANCE CHECKLISTS AS OUTLINED IN THE PREVIOUS SECTIONS
3. WARRANTIES AND MAINTENANCE MANUALS, IF APPLICABLE (SHELTER, TOWER, GENERATOR)
4. GROUND SYSTEM RESISTANCE TEST
5. CERTIFICATE OF OCCUPANCY

B. MARKED UP DRAWINGS SUITABLE TO PRODUCE AS-BUILTS WILL BE REQUIRED WITHIN ONE WEEK FOLLOWING PRACTICAL COMPLETION AND BEFORE FINAL PAYMENT. THESE DRAWINGS SHALL BE SUBMITTED TO THE SDM FOR APPROVAL AND FURTHER PROCESSING.

C. LIEN WAIVERS AS OUTLINED IN THE PAYMENT TERMS OF THE CONTRACT WILL BE REQUIRED PRIOR TO APPROVAL OF FINAL PAYMENT.

1.27 INSURANCE AND BONDS:
A. EACH CONTRACTOR SHALL AT HIS OWN EXPENSE CARRY AND MAINTAIN FOR THE DURATION OF THE PROJECT ALL INSURANCES AS REQUIRED AND LISTED AND SHALL NOT COMMENCE WITH HIS WORK UNTIL HE HAS PRESENTED A CERTIFICATE OF INSURANCE STATING ALL COVERAGES OF THE GENERAL CONTRACTOR WHO SHALL, IN TURN, FORWARD A COPY OF ALL CERTIFICATES TO THE SDM.

B. CARRIERS SPECIFIC PROJECT SITE SHALL BE NAMED AS ADDITIONAL INSURED ON ALL POLICIES.

C. THE FOLLOWING ITEMS ARE QUALIFICATIONS THAT CARRIER WILL REQUIRE FROM THE CONTRACTOR WHO IS AWARDED THE CONTRACT.

D. CONTRACTOR MUST PROVIDE PROOF OF INSURANCE MEETING CARRIER INSURANCE REQUIREMENTS. THE FOLLOWING IS A LIST OF MINIMUM INSURANCE REQUIREMENTS REQUIRED BY CARRIER, STATUTORY WORKERS' COMPENSATIONS, INCLUDING $500,000.00 EMPLOYERS' LIABILITY.
1. COMPREHENSIVE GENERAL LIABILITY INCLUDING PERSONAL INJURY, BROAD FORM PROPERTY DAMAGE, INDEPENDENT CONTRACTOR, "XCU", AND PRODUCTS/COMPLETED OPERATIONS, WITH LIMITS NOT LESS THAN $2,000,000.00 PER OCCURRENCE.
2. ADDITIONAL INSURED ENDORSEMENT NAMING CARRIER, AND CARRIER'S CONTRACT REPRESENTATIVES, ON THE LIABILITY POLICIES OF THE CONTRACTOR.
3. AUTOMOBILE LIABILITY NOT LESS THAN $1,000,000.00 PER OCCURRENCE.
4. EXCESS LIABILITY "UMBRELLA" POLICY OF $1,000,000.00 PER OCCURRENCE.

PART 2 SITE WORK: EARTHWORK AND DRAINAGE
2.00 SITE PREPARATION:

A. SITE PREPARATION
1. THE CONTRACTOR SHALL TAKE ALL REASONABLE MEASURES TO PROTECT EXISTING STRUCTURES, UTILITIES, WALKWAYS, PAVEMENTS, AND OTHER FACILITIES FROM DAMAGE DURING CONSTRUCTION OPERATIONS.
2. SAFETY MEASURES WILL BE REQUIRED OF THE CONTRACTOR TO PROTECT ALL PERSONNEL DURING FOUNDATION EXCAVATION AND SHELTER CRANING. THIS MAY INCLUDE, BUT IS NOT LIMITED TO, TEMPORARY DISCONNECTION OF OVERHEAD POWER LINES.
B. GEOTECHNICAL INFORMATION
1. A PROFESSIONAL GEOTECHNICAL INVESTIGATION OF THE SITE MAY BE CARRIED OUT BY OTHERS AND FURNISHED TO THE CONTRACTOR AS PART OF THE SITE SPECIFIC PLANS AND SPECIFICATIONS FOR REFERENCE ONLY AND DOES NOT LIMIT HIS LIABILITY. THE CONTRACTOR SHALL BE RESPONSIBLE FOR HIS OWN INTERPRETATIONS OF THE SUBSURFACE CONDITIONS DOCUMENTED IN THE GEOTECHNICAL REPORT. IF HE CONSIDERS THIS INFORMATION AND/OR SAMPLES TO BE LACKING OR INADEQUATE, HE SHALL CARRY OUT FURTHER INVESTIGATIONS, AT HIS EXPENSE, TO SATISFY HIMSELF OF THE SUB-SURFACE CONDITIONS.
C. SURVEYING AND LAYOUT
1. A PROFESSIONAL LAND SURVEY OF THE SITE MAY BE FURNISHED TO THE CONTRACTOR AS PART OF THE PLANS AND SPECIFICATIONS. THE CONTRACTOR SHALL USE A REGISTERED LAND SURVEYOR, AT HIS OWN EXPENSE, FOR ALL CONSTRUCTION SURVEYING THAT MAY BE REQUIRED TO COMPLETE THE WORK IN ACCORDANCE WITH THE PLANS AND SPECIFICATIONS.
2. WHERE THE CONTRACTOR BELIEVES THAT NECESSARY DIMENSIONS ARE NOT SHOWN ON THE CONSTRUCTION PLANS, HE MUST REQUEST THESE DIMENSIONS FROM THE SDM IN WRITING BEFORE STARTING THE JOB. HE SHALL MAKE ADEQUATE PROVISIONS, IN TIME, FOR THE SDM TO DETERMINE SUCH DIMENSIONS WITHOUT CAUSING DELAY OF WORKS.
D. EXISTING UTILITIES
1. THE CONTRACTOR IS RESPONSIBLE FOR LOCATING ALL UTILITIES PRIOR TO COMMENCING CONSTRUCTION ACTIVITY. TRENCHES IN PUBLIC ROADS, RIGHT OF WAYS AND PRIVATE PROPERTY SHALL BE EXCAVATED IN SUCH A MANNER THAT NO DAMAGE TO A UTILITY IS LIKELY TO OCCUR. THE CONTRACTOR WILL BE HELD RESPONSIBLE FOR THE SAFETY AND IF NECESSARY REPAIR OF ALL PUBLIC UTILITY SERVICES SUCH AS GAS, ELECTRICITY, WATER, TELEPHONE, AND THE LIKE. CONTRACTOR IS RESPONSIBLE FOR PAYMENT OF ALL FINES ASSOCIATED WITH INTERRUPTION OF EXISTING UTILITIES.
2. DO NOT INTERRUPT EXISTING UTILITIES SERVING THE PROPERTY OWNER OR OTHERS WITHOUT WRITTEN PERMISSION FROM THE PROPERTY OWNER AND APPROVAL FROM THE SDM. PROVIDE 48 HOUR NOTIFICATION TO THE PROPERTY OWNER AND THE SDM PRIOR TO INTERRUPTION OF EXISTING UTILITIES AND ONLY AFTER MAKING PROVISION FOR TEMPORARY UTILITY SERVICES, RELOCATE EXISTING UTILITIES AS DIRECTED ON THE CONSTRUCTION PLANS.
3. WHERE INACTIVE SEWER, WATER, GAS, ELECTRICAL, OR OTHER UTILITIES ARE ENCOUNTERED WITHIN THE SITE THAT INTERFERE WITH THE EXECUTION OF THE CONSTRUCTION WORK, THE CONTRACTOR SHALL AT HIS OWN EXPENSE, REMOVE TERMINATE SUCH UTILITIES IN ACCORDANCE WITH THE UTILITY COMPANY'S RECOMMENDATION, AS REQUIRED BY LOCAL ORDINANCES AND CARRIED OUT BY SITE CONTRACTOR.
E. EROSION CONTROL
1. EROSION CONTROL MEASURES SUCH AS SILT FENCING AND/OR HAYBALES SHALL BE UTILIZED TO PREVENT SOIL AND DEBRIS FROM CONTAMINATING ADJACENT PROPERTIES, WALKWAYS, AND ROADS.

2.01 WORK INCLUDED:

REFER TO THE LAND DEVELOPMENT PLAN AND SITE PLAN FOR WORK INCLUDED

2.02 RELATED WORK:

A. CONSTRUCTION OF BUILDING FOUNDATION
B. INSTALLATION OF ANTENNA SYSTEM

2.03 DESCRIPTIONS:
A. ACCESS ROAD, TURNAROUND AREAS, AND SITES ARE CONSTRUCTED TO PROVIDE A WELL DRAINED, EASILY MAINTAINED, EVEN SURFACE FOR MATERIAL AND EQUIPMENT DELIVERIES AND MAINTENANCE PERSONNEL ACCESS.

2.04 QUALITY ASSURANCE:
A. APPLY SOIL STERILIZER IN ACCORDANCE WITH MANUFACTURER'S RECOMMENDATION (USE AS NEEDED).
B. GRASS SEED SHALL BE APPLIED AND MAINTAINED AS RECOMMENDED BY THE SEED PRODUCER (IF REQUIRED).
C. VEGETATION LANDSCAPING, IF INCLUDED WITHIN THE CONTRACT, WILL BE PLACED AND MAINTAINED AS RECOMMENDED BY NURSERY INDUSTRY STANDARDS (IF REQUIRED).

2.05 SEQUENCING (WHERE APPLICABLE):
A. CONFIRM SURVEY STAKES AND SET ELEVATION STAKES PRIOR TO ANY CONSTRUCTION.
B. THE COMPLETE ROAD AND SITE AREA WILL BE GRUBBED PRIOR TO FOUNDATION CONSTRUCTION OR PLACEMENT OF BACKFILL OR SUB-BASE MATERIAL.
C. CONSTRUCT TEMPORARY CONSTRUCTION ZONE ALONG ACCESS DRIVE.
D. THE SITE AREA WILL BE BROUGHT TO SUB-BASE COURSE ELEVATION AND THE ACCESS ROAD TO BASE COURSE ELEVATION PRIOR TO FORMING FOUNDATIONS.
E. APPLY 7LB. DYCLOMEC BAG HERBICIDE PER 1,000 SQ. FT. AND INSTALL 60 MIL. THICK "TERRABOND TYPE II" GEOTEXTILE FABRIC OVER HERBICIDE TREATED SOIL PRIOR TO PLACING BASE MATERIALS.
F. GRADE, SEED, FERTILIZE, AND MULCH DISTURBED AREAS IMMEDIATELY AFTER BRINGING THE SITE AND ACCESS ROAD TO BASE COURSE ELEVATION. WATER SITE TO ENSURE GROWTH.
G. REMOVE GRAVEL FROM TEMPORARY CONSTRUCTION ZONE.
H. AFTER COMPLETION OF CONSTRUCTION BUT PRIOR TO THE FINAL PUNCH LIST INSPECTION, APPLY 6 INCHES OF FDOT 57 CRUSHED STONE.
I. AFTER APPLICATIONS OF FINAL SURFACES, APPLY SOIL STERILIZER TO THE STONE SURFACES.

2.06 SUBMITTALS:
A. BEFORE CONSTRUCTION
1. IF LANDSCAPING IS APPLICABLE TO THE CONTRACT, TWO COPIES OF THE LANDSCAPE PLAN UNDER NURSERY LETTERHEAD. IF A LANDSCAPE ALLOWANCE WAS INCLUDED IN THE CONTRACT, AN ITEMIZED LISTING OF PROPOSED COSTS UNDER NURSERY LETTERHEAD (REFER TO SITE PLAN FOR LANDSCAPING REQUIREMENT).
2. SUBMIT FOR APPROVAL, ½ CUBIC FOOT OF THE PROPOSED SURFACE COURSE MATERIAL

B. AFTER CONSTRUCTION
1. MANUFACTURER'S DESCRIPTION OF PRODUCT AND WARRANTY STATEMENT ON SOIL STERILIZED.
2. MANUFACTURER'S DESCRIPTION OF PRODUCT ON GRASS SEED AND FERTILIZER.
3. LANDSCAPING WARRANTY STATEMENT.

2.07 WARRANTY:
A. IN ADDITION TO THE WARRANTY ON ALL CONSTRUCTION COVERED IN THE CONTRACT DOCUMENTS, THE CONTRACTOR SHALL REPAIR ALL DAMAGE TO CARRIER PROPERTY OR SURROUNDING PROPERTY CAUSED BY CONSTRUCTION.
B. SOIL STERILIZATION APPLICATION WILL GUARANTEE VEGETATION FREE ROAD AND SITE AREAS FOR ONE YEAR FROM DATE OF FINAL INSPECTION.
C. DISTURBED AREAS WILL REFLECT GROWTH OF NEW GRASS COVER PRIOR TO FINAL INSPECTION.
D. LANDSCAPING, IF INCLUDED WITHIN THE SCOPE OF THE CONTRACT, WILL BE GUARANTEED FOR ONE YEAR FROM DATE OF FINAL SITE ACCEPTANCE.

PART 3 PRODUCTS
3.00 MATERIALS:

A. SOIL STERILIZERS
1. TOTAL KILL PHASAR CORPORATION
PRODUCT 910 PO BOX 523
EPA 10292-7 DEARBORN, MI 48128
(313) 563-8000

2. AMBUSH HERBICIDE FARMER INDUSTRIAL PRODUCTS - EPA REGISTERED
1435 MORRIS AVENUE
UNION, NJ 07083
(800) 526-4924

B. ROAD AND SITE MATERIALS SHALL CONFORM TO ILLINOIS DEPARTMENT OF TRANSPORTATION (IDOT) SPECIFICATIONS. IF THE SITE IS LOCATED IN ANOTHER STATE, ROAD AND SITE MATERIALS SHALL CONFORM TO THE STANDARDS OF THAT STATE.
C. FILL MATERIAL – ACCEPTABLE SELECT FILL SHALL BE IN ACCORDANCE WITH IDOT STANDARD SPECIFICATION FOR HIGHWAYS AND PUBLIC TRANSPORTATION. IF THE SITE IS LOCATED IN ANOTHER STATE, FILL MATERIAL SHALL CONFORM TO THE STANDARDS OF THAT STATE.
D. SOIL STERILIZER SHALL BE EPA REGISTERED OF LIQUID COMPOSITION AND OF PRE EMERGENCE DESIGN.
E. SOIL STABILIZER FABRIC SHALL BE 60 MIL. THICK "TERRABOND TYPE II"

3.01 EQUIPMENT:
A. COMPACTION SHALL BE ACCOMPLISHED BY MECHANICAL MEANS.
1. LARGER AREAS SHALL BE COMPACTED BY SEEPS FOOT, VIBRATORY, OR RUBBER TIRED ROLLERS WEIGHING AT LEAST FIVE TONS.
2. SMALLER AREAS SHALL BE COMPACTED BY POWER-DRIVER HAND HELD TAMPERS.

PART 4 EXCAVATION
4.00 INSPECTIONS:

A. LOCAL BUILDING INSPECTION SHALL BE NOTIFIED NO LESS THEN 48 HRS. IN ADVANCE OF CONCRETE POURS.

T-Mobile

T-MOBILE USA, INC.
2001 BUTTERFIELD RD.
DOWNERS GROVE, IL 60515

Insite inc.
Real Estate Consulting Services
15660 MIDWEST RD.
OAKBROOK TERRACE, IL 60181

forge
FORGE SERVICES, INC.
T: (630) 451-9890
15660 MIDWEST RD. STE. 140
OAKBROOK TERRACE, IL 60181

FORGE PROJECT NO: **8009**
DRAWN BY: **AC**
CHECKED BY: **JL**

REV	DATE	DESCRIPTION
A	06/26/2020	ISSUED FOR REVIEW
0	07/21/2020	ISSUED FOR PERMIT

CONSTRUCT ONLY FROM DRAWINGS MARKED "ISSUED FOR CONSTRUCTION"

FREDERICK Y. BENJAMIN
062-033842
REGISTERED PROFESSIONAL ENGINEER OF ILLINOIS

© 2020 FORGE SERVICES, INC. ALL RIGHTS RESERVED

CH22901A
WESTERN SPRINGS WT

4900 S WILLOW SPRINGS RD.
WESTERN SPRINGS, IL 60558

WATER TOWER

GENERAL NOTES

GN2.1

THIS DRAWING IS SCALED FOR 11×17 PAPER (U.S. GOVT. "TABLOID")

4.01 PREPARATION:
A. CLEAR TREES, BRUSH AND DEBRIS FROM SITE AREA AND ACCESS ROAD RIGHT OF WAY (IF REQUIRED AND WHERE APPROVED).
B. PRIOR TO OTHER EXCAVATION AND CONSTRUCTION EFFORTS GRUB ORGANIC MATERIAL TO A MIN. OF SIX INCHES BELOW ORIGINAL GROUND LEVEL.
C. UNLESS OTHERWISE INSTRUCTED BY SDM, REMOVE TREES, BRUSH, AND DEBRIS FROM THE PROPERTY TO AN AUTHORIZED LANDFILL.
D. ALL EXCESSIVE SOIL TO BE REMOVED FROM SITE.
E. PRIOR TO PLACEMENT OF FILL OR BASE MATERIALS, THE SOIL IS TO BE ROLLED.
F. WHERE UNSTABLE SOIL CONDITIONS ARE ENCOUNTERED, LINE OF THE GRUBBED AREAS WITH STABILIZER MAT PRIOR TO PLACEMENT OF FILL OR BASE MATERIAL.
G. DEWATERING
I. PREVENT SURFACE WATER FROM ENTERING EXCAVATIONS, FROM ACCUMULATING ON PREPARED SUBGRADES AND FROM FLOODING THE SITE AND ADJACENT PROPERTIES DURING THE CONSTRUCTION PERIOD. THE CONTRACTOR SHALL TAKE ADDITIONAL MEASURES, IF REQUIRED, TO PREVENT SUBSURFACE WATER FROM SOFTENING THE SUBGRADES AND FOUNDATION SOILS PRIOR TO PLACEMENT OF CONCRETE.
H. SLOPING AND SHORING OF EXCAVATIONS
I. THE CONTRACTOR SHALL PROVIDE ADEQUATE SLOPING, SHORING, BRACING AND/OR SHEET PILING FOR EXCAVATIONS TO PROTECT ADJACENT STRUCTURES AND COMPLY WITH RELEVANT LOCAL CODES, ORDINANCES AND AUTHORITIES, INCLUDING BUT NOT LIMITED TO OSHA AND ANSI REGULATIONS.

4.02 INSTALLATION:
A. THE SITE AND TURNAROUND AREAS SHALL BE AT THE SUB-BASE COURSE ELEVATION PRIOR TO FORMING FOUNDATIONS. GRADE OR FILL THE SITE AND ACCESS ROAD IN ORDER THAT EVEN DISTRIBUTION OF SPOILS FROM FOUNDATION EXCAVATIONS PRODUCE A RESULTING GRADE TO CORRESPOND WITH SUB-BASE COURSE. ELEVATIONS ARE TO BE CALCULATED FROM FINISHED GRADES OR SLOPES INDICATED.
B. EXCESS SPOILS WILL BE CLEARED FROM JOB SITE AND NOT SPREAD BEYOND THE LIMITS OF CARRIER LEASE PROPERTY UNLESS AUTHORIZED BY SDM.
C. THE ACCESS ROAD SHALL BE BROUGHT TO BASE COURSE ELEVATION PRIOR TO FOUNDATION CONSTRUCTION TO PERMIT USE, COMPACTION AND OBSERVATION DURING CONSTRUCTION OF THE SITE.
D. AVOID CREATING DEPRESSIONS WHERE WATER MAY POND.
E. THE CONTRACT SHALL INCLUDE GRADING, BANKING, DITCHING AND UNLESS OTHERWISE INDICATED, COVERING TWO INCHES OF SURFACE COURSE. ALL ROADS OR ROUTES UTILIZED FOR ACCESS TO THE CARRIER SITE COMMENCING AT THE POINT OF INTERSECTION WITH THE NEAREST PUBLIC THOROUGHFARE.
F. WHEN IMPROVING AN EXISTING ACCESS ROAD, GRADE THE EXISTING ROAD TO REMOVE ANY ORGANIC MATTER AND SMOOTH THE SURFACE BEFORE PLACING FILL OR STONE.
G. PLACE FILL OR STONE IN SIX INCH MAXIMUM AND COMPACT BEFORE PLACING NEXT LIFT.
H. THE FINISH GRADE, INCLUDING TOP SURFACE COURSE, SHALL EXTEND A MINIMUM OF ONE FOOT BEYOND THE SITE FENCE AND SHALL COVER THE AREA AS INDICATED.
I. RIPRAP SHALL BE APPLIED TO THE SIDE SLOPES OF ALL FENCED SITE AREAS, PARKING AREAS, AND TO ALL OTHER SLOPES GREATER THAN 2:1.
J. RIPRAP SHALL BE APPLIED TO THE SIDES OF DITCHES OR DRAINAGE SWALES.
K. RIPRAP ENTIRE DITCH FOR SIX FEET IN ALL DIRECTIONS AT CULVERT OPENINGS.
L. SOD, FERTILIZER, AND STRAW COVER SHALL BE APPLIED TO ALL OTHER DISTURBED AREAS, AND DITCHES, DRAINAGE, SWALES, NOT OTHERWISE RIPRAPPED.
M. UNDER NO CIRCUMSTANCES WILL DITCHES, SWALES, OR CULVERTS BE PLACED SO THEY DIRECT WATER TOWARDS, OR PERMIT STANDING WATER WITHIN THE SITE. IF SUCH CONDITIONS ARE DISCOVERED DURING CONSTRUCTION, THE CARRIER IS TO BE NOTIFIED IMMEDIATELY.
N. IF DITCH LIES WITH SLOPES GREATER THAN TEN PERCENT, MOUND DIVERSIONARY HEADWALLS IN THE DITCH AT CULVERT ENTRANCES. THE HEADWALL SHALL BE POSITIONED AT AN ANGLE NO GREATER THAN 60 DEGREES OFF THE DITCH LINE. RIPRAP THE UPSTREAM SIDE OF THE HEADWALL AS WELL AS THE DITCH FOR SIX FEET ABOVE THE CULVERT ENTRANCE.
O. SOD AND FERTILIZER SHALL BE APPLIED TO SURFACE CONDITIONS WHICH WILL ENCOURAGE ROOTING. RAKE AREAS TO BE SEEDED TO EVEN THE SURFACE AND LOOSEN THE SOIL.
P. IT IS THE CONTRACTOR'S RESPONSIBILITY TO ENSURE GROWTH OF SODDED AND LANDSCAPED AREAS, BY WATERING, UP TO THE POINT OF RELEASE FROM THE CONTRACT. CONTINUE TO REWORK BARE AREAS UNTIL COMPLETE COVERAGE IS OBTAINED.

4.03 FIELD QUALITY CONTROL:
A. COMPACTION SHALL BE MAXIMUM DENSITY IN ACCORDANCE WITH ASTM D-1557. AREAS OF SETTLEMENT WILL BE EXCAVATED AND REFILLED AT CONTRACTOR'S EXPENSE. PERCENTAGE OF COMPACTION SHALL BE NOTED ON THE DRAWINGS.

4.04 PROTECTION:
A. PROTECT SODDED AREAS FROM EROSION BY SPREADING STRAW TO A UNIFORM LOOSE DEPTH OF 1-2 INCHES, STAKE AND TIE DOWN AS REQUIRED. USE OF EROSION CONTROL, MESH OR MULCH NET, WILL BE AN ACCEPTABLE ALTERNATE.
B. ALL TREES PLACED IN CONJUNCTION WITH A LANDSCAPE CONTRACT WILL BE WRAPPED, TIED WITH HOSE PROTECTED WIRE, AND SECURED TO 2-INCH X 2-INCH X 4-FOOT WOODEN STAKES EXTENDING TWO FEET INTO THE GROUND ON FOUR SIDES OF THE TREE.
C. ALL EXPOSED AREAS SHALL BE PROTECTED AGAINST WASHOUTS AND SOIL EROSION. STRAW BALES WILL BE PLACED AT THE INLET APPROACH TO ALL NEW OR EXISTING CULVERTS WHERE THE SITE OR ROAD AREAS HAVE BEEN ELEVATED IMMEDIATELY ADJACENT TO THE RAIL LINE. EROSION CONTROL FABRIC WILL BE STAKED FULL LENGTH IN THE SWALE BETWEEN THE SITE AND THE RAIL BED TO PREVENT CONTAMINATION OF THE RAIL BALLAST.

PART 5 SPECIALTY ITEMS
5.00 READY-MIX CONCRETE:
A. UNLESS OTHERWISE NOTED ON THE CONSTRUCTION PLANS, READY-MIX CONCRETE SHALL BE 4,000 PSI STRENGTH CONCRETE CONFORMING TO THE ASTM C 94 STANDARDS. SUBMIT DESIGN TO SDM FOR APPROVAL ONE WEEK PRIOR TO POURING CONCRETE. EACH BATCH OF CONCRETE DELIVERED TO THE SITE MUST BE ACCOMPANIED BY A DELIVERY TICKET, PREPARED BY THE READY-MIX SUPPLIER STATING THE TICKET NUMBER, DELIVERY DATE, TIME OF ARRIVAL AT SITE, QUANTITY DELIVERED, AMOUNT OF WATER ADDED ON SITE, MIXING, AND TRAVEL TIME TO THE SITE, AND TIME THAT BATCH POUR WAS COMPLETED.
B. CEMENT SHALL BE PORTLAND TYPE I OR II AS PER ASTM C 150 STANDARDS. AGGREGATES SHALL BE EVENLY GRADED BETWEEN ¼ AND ¾ INCHES AS PER ASTM C 33 STANDARDS. WATER SHALL BE POTABLE WATER CEMENT RATIO AS PER ACI 301. AIR ENTRAINING IN EXTERIOR EXPOSED CONCRETE SHALL BE 6 PERCENT PER ASTM 260. THE USE OF WATER-REDUCING ADMIXTURES IS PERMITTED. NOTIFY THE SDM IN ADVANCE OF USING SUCH ADMIXTURES.
C. WHERE SITE CONDITIONS, WEATHER, REQUIRE ADJUSTMENTS TO THE CONCRETE DESIGN MIX, THE CONTRACTOR SHALL OBTAIN APPROVAL FROM THE SDM IN ADVANCE OF ORDERING THE CONCRETE.
D. COVER THE REINFORCING STEEL WITH WATERED SOAKED BURLAP TO PREVENT THE STEEL FROM EXCEEDING THE AMBIENT AIR TEMPERATURE. KEEP SUBGRADE EVENLY MOISTENED TO OPTIMUM MOISTURE CONTENT. THE USE OF WATER-REDUCING ADMIXTURES IS PERMITTED. NOTIFY THE SDM IN ADVANCE OF USING SUCH ADMIXTURES.
E. UNLESS OTHERWISE NOTED ON THE CONSTRUCTION PLANS, ALL EXPOSED SURFACES SHALL RECEIVE A BROOM FINISH PERPENDICULAR TO THE PRIMARY TRAFFIC PATH OR LONGEST DIMENSION OF THE SURFACE. EXPOSED EDGES OF ALL TOWER FOUNDATIONS SHALL RECEIVE A ¾' BY ¾' INCH, 45 DEGREE CHAMFER. OTHER EXPOSED EDGES SHALL RECEIVE A TOOLED RADIUS FINISH.
F. PROTECT ALL CONCRETE DURING POURING PERIODS FROM EXCESSIVE LOSS OF MOISTURE AND EXTREME TEMPERATURES (AS OUTLINED ABOVE). IF NECESSARY, SPRAY CONCRETE WITH A CONCRETE CURING COMPOUND TO MAINTAIN OPTIMUM MOISTURE CONTENT FOR A 1 DAY PERIOD. MINIMUM CURING – 28 DAYS STRENGTH.
G. A MINIMUM OF 24 HOURS CURING OF MAT FOUNDATION CONCRETE IS REQUIRED BEFORE PLACING PIER FORMWORK AND CONCRETE.

5.01 TESTING AND INSPECTIONS:
A. SLUMP TESTS, AIR CONTENT TEST, TEMPERATURE READINGS, AND THE SECURING OF COMPRESSION TEST CYLINDERS, SHALL BE THE RESPONSIBILITY OF THE CONTRACTOR IN THE PRESENCE OF AN APPROVED CARRIER REPRESENTATIVE. ONE OF EACH TEST (AS PER BLOW) AND THREE TEST CYLINDERS (AS PER ASTM C 30 SHALL BE TAKEN ON EACH CONCRETE BATCH AT THE BEGINNING OF POURING. TESTING REPORTS TO BE SUBMITTED TO CARRIER COMMUNICATIONS.

5.02 SLUMP:
A. THE SLUMP TEST SHALL BE PERFORMED ACCORDING TO ASTM C 143. THE ALLOWABLE SLUMP SHALL BE FOUR INCHES PLUS OR MINUS ONE INCH UNLESS OTHERWISE APPROVED BY THE SDM.

5.03 TEMPERATURE:
A. UNDER NORMAL POURING CONDITIONS THE TEMPERATURE OF THE CONCRETE SHALL NOT EXCEED 90 DEGREES FAHRENHEIT (32 DEGREES CELSIUS) OR GO BELOW 45 DEGREES FAHRENHEIT (7 DEGREES CELSIUS).
B. FOR PROPER RECORD KEEPING, EACH SET OF TEST CYLINDERS SHALL BE MARKED OR TAGGED WITH THE DATE AND TIME OF DAY THE CYLINDERS WERE MADE, THE SITE NAME AND LOCATION OF THE SAMPLED CONCRETE, THE DELIVERY TRUCK OR BATCH NUMBER, THE AIR CONTENT AND THE SLUMP.
C. THE CONTRACTOR SHALL BE RESPONSIBLE FOR THE DELIVERY OF ALL COMPRESSION TEST CYLINDERS TO CARRIER'S APPROVED TESTING LABORATORY.
D. THE MINIMUM ACCEPTABLE COMPRESSIVE STRENGTHS AS DETERMINED BY ASTM C 39 SHALL BE 70 PERCENT OF FULL DESIGN STRENGTH AT 7 DAYS AND 100 PERCENT OF FULL DESIGN AT 28 DAYS. RESULT OF THE 7-DAY CYLINDER BREAK TEST MUST BE CONFIRMED BY THE CONTRACTOR PRIOR TO PLACING THE BUILDING OR ERECTING THE TOWER. WRITTEN CONFIRMATION OF THE 7-DAY AND 28-DAY CYLINDER BREAKS WILL BE REQUIRED IN THE PRACTICAL COMPLETION DOCUMENTATION.

5.04 CONCRETE REINFORCEMENT:
A. ALL CONCRETE REINFORCING BARS SHALL BE GRADE 60, DEFORMED BARS CONFORMING TO ASTM A615 STANDARDS, UNLESS OTHERWISE SPECIFIED, AND SHALL BE FREE OF LOOSE RUST AND SCALE. HEATING AND WELDING OF REINFORCING BARS IS STRICTLY PROHIBITED. A THREE INCH MINIMUM CLEAR SPACE IS REQUIRED BETWEEN ALL REINFORCING AND ALL CONCRETE SURFACES.
B. WELDED WIRE FABRIC SHALL BE PER ASTM A 185 STANDARDS. STEEL WIRE SHALL BE PLAIN, COLD DRAWN WIRE AS PER ASTM A 82.
C. ALL REINFORCING BOLSTER CHAIRS, SPACERS, AND OTHER ACCESSORIES FOR FASTENING BARDS AND WELDED WIRE FABRIC IN PLACE SHALL BE ACCURATELY POSITIONED AND SECURED WHILE CONCRETE IS BEING POURED. ALL REINFORCEMENT SHALL HAVE A MINIMUM CONCRETE COVER OF 3 INCHES, UNLESS OTHERWISE NOTED ON THE CONSTRUCTION PLANS.

5.05 FORMWORK:
A. PLACE, ERECT, SUPPORT, AND BRACE FORMS TO PROVIDE HARDENED INDICATED ON THE DRAWINGS. FOUNDATIONS SHALL BE FORMED TO A DEPTH OF 12" BELOW THE FROST OR IN ACCORDANCE WITH THE CONSTRUCTION PLAN, WHICHEVER IS GREATER. EXPOSED CONCRETE SURFACES SHALL BE CONSIDERED ARCHITECTURAL CONCRETE FORMED TO THE TOLERANCES 0.75 INCHES OVER ENTIRE DIMENSION AND HAVING SURFACE CONSISTENCES AS PER ASTM 347 STANDARDS.
B. FABRICATE FORMS TO ALLOW FOR EASY REMOVAL AFTER CONCRETE CURING WITHOUT THE NEED FOR PRYING AND HAMMERING AGAINST CONCRETE SURFACES. FORM MATERIALS SHALL BE SUFFICIENTLY TIGHT TO PREVENT LEAKAGE OF CEMENT PASTE. PROVIDE SUFFICIENT WALL THICKNESS OF TUBES TO PREVENT DEFORMATION DUE TO FORCES OF EXTERNAL PRESSURE.

5.06 WET CONCRETE:
A. BEFORE ANY FOUNDATION EXCAVATION BEGINS, THE CONTRACTOR SHALL VERIFY ALL SHELTER TOWER BASE, AND GUY ANCHOR LOCATIONS AS SHOWN ON THE SITE DRAWINGS. DISCREPANCIES SHALL BE REPORTED TO THE SDM AS SOON AS POSSIBLE AND BEFORE EXCAVATION COMMENCES.

5.07 EXCAVATIONS:
A. EXCAVATE FOOTINGS AND FOUNDATIONS TO THE ELEVATIONS AND DIMENSIONS INDICATED ON THE CONSTRUCTION PLANS. EXTEND THE WIDTH OF EXCAVATIONS AT LEAST THREE FEET, OR IN ACCORDANCE WITH OSHA REGULATIONS-WHICHEVER IS GREATER, TO ALLOW FOR SAFE PLACING AND REMOVAL OF FORMWORK, INSTALLATION OF SERVICES AND PERFORMING INSPECTIONS.
B. EXCAVATIONS CARRIED OUT BELOW THE DEPTHS INDICATED ON THE CONSTRUCTION PLANS OR AUTHORIZED BY THE SDM SHALL BE CONSIDERED UNAUTHORIZED. AT NO ADDITIONAL EXPENSE TO CARRIER THE UNAUTHORIZED EXCAVATIONS SHALL BE FILLED TO THE ELEVATIONS INDICATED ON THE CONSTRUCTION PLANS WITH FOUNDATION, CONCRETE, A LEAN CONCRETE MIX, OR ADEQUATELY COMPACTED F.D.O.T. 57 CRUSHED STONE AS APPROVED BY THE SDM.
C. RESULTS AS APPROVED BY THE SDM. EXPENSE FOR SUCH WORK SHALL BE REIMBURSED TO THE CONTRACTOR.
D. UTILITY TRENCHES SHALL BE EXCAVATED AS REQUIRED BY THE CONSTRUCTION PLANS OR LOCAL CODES, WHICHEVER IS GREATER TO ALLOW INSTALLATION OF THE TOP OF THE PIPE OR CABLING TO BE BELOW THE FROST LINE. PROVIDE UNIFORM BEARING AND SUPPORT ALONG THE FULL LENGTH OF THE CONDUIT PIPE. REMOVE STONES AND OTHER OBJECTS FROM THE EXCAVATION THAT WOULD OTHERWISE CAUSE POINT LOADING DAMAGE.

5.08 FILL MATERIAL:
A. FILL MATERIAL SHALL BE OBTAINED, TO THE MAXIMUM EXTENT POSSIBLE, FROM EXCAVATIONS ON SITE AND SHALL BE APPROVED BY THE SDM. THE FILL MATERIAL SHALL CONTAIN NO ORGANICS OR ROCKS LARGER THAN 6 INCHES, NOR SHALL CONTAIN OBJECTIONABLE MATERIALS AND/OR MATERIALS DESIGNATED AS HAZARDOUS OR INDUSTRIAL BY THE ENVIRONMENTAL PROTECTION AGENCY (EPA). THE FILL MATERIAL SHALL CONTAIN FINES SUFFICIENT TO FILL ALL VOIDS IN THE MATERIAL. MOISTURE CONTENT OF FILL MATERIAL SHALL BE WITHIN 2 PERCENT OF OPTIMUM MOISTURE CONTENT PRIOR TO COMPACTION. UNDER SLABS-ON-GRADE, PROVIDE FULLY COMPACTED DRAINAGE FILL CONSISTING OF A WASHED 57 STONE TO THE REQUIRED THICKNESS AND ELEVATIONS INDICATED ON THE CONSTRUCTION PLANS.

5.09 BORROW MATERIAL:
A. UNDER SLABS-ON-GRADE, PROVIDE FULLY COMPACTED DRAINAGE FILL CONSISTING OF CRUSHED STONES TO THE REQUIRED THICKNESS AND THE FILL MATERIAL SHALL CONTAIN NO ORGANIC MATERIAL.

5.10 BACKFILL AND COMPACTION:
A. BACKFILL OPERATIONS SHALL ONLY COMMENCE AFTER ALL CONSTRUCTION BELOW FINISH GRADE HAS BEEN INSPECTED BY THE RELEVANT AUTHORITIES AND APPROVED BY THE SDM. ALL DEBRIS, FORMWORK, EXCESS MATERIAL, AND TRASH SHALL BE REMOVED FROM THE EXCAVATION PRIOR THE BACKFILL.

B. PLACE AND COMPACT FILL MATERIAL EVENLY ALONG THE FULL LENGTH OF ALL FOUNDATIONS, UTILITY CONDUITS AND PIPES AND EVENLY UNDER ALL SLABS AND PAVEMENTS TO THE REQUIRED ELEVATIONS. COMPACTION OF BACKFILL OR BORROW SOIL SHALL BE PERFORMED IN 12 INCH LIFTS OF LOOSE MATERIAL WHEN UTILIZING HEAVY COMPACTION EQUIPMENT OR 6 INCH LIFTS OF LOOSE WHEN UTILIZING HAND OPERATED TAMPERS.

C. COMPACTION OF ALL BACKFILL SHALL ACHIEVE 95 PERCENT OF MAXIMUM DRY DENSITY AT OPTIMUM MOISTURE CONTENT IN ACCORDANCE WITH ASTM D698. STRUCTURAL BACKFILL SHALL HAVE A MINIMUM COMPACTED WEIGHT OF 100 POUNDS PER CUBIC FOOT.

D. FOR ALL FILLS AND EMBANKMENTS, DO NOT PLACE ON MUDDY OR FROZEN SURFACES, OR SURFACES THAT CONTAIN ORGANIC MATERIAL SUCH AS LEAVES, GRASS, ROOTS, OR BRUSH. ON SLOPES STEEPER THAN 25 PERCENT GRADE, PLOW STRIP OR OTHERWISE BREAK UP THE SURFACE TO BOND FILL MATERIAL WITH THE EXISTING SURFACE.

5.11 VAPOR BARRIERS AND FILTER FABRICS:
A. PROVIDE 6 MIL POLYETHYLENE VAPOR BARRIER WHERE INDICATED ON THE CONSTRUCTION PLANS. FILTER FABRIC SHALL BE A PERVIOUS GEOTEXTILE FABRIC OF POLYPROPYLENE, NYLON, OR POLYESTER FIBER WITH A 100 LB. TENSILE STRENGTH, 100 APPARENT OPENING SIZE AND A PERMEABILITY OF 150 GALLONS/MINUTE/SF.

PART 6 EQUIPMENT SHELTER (IF APPLICABLE)
6.00 DELIVERY AND PLACEMENT:
A. THE CONTRACTOR IS RESPONSIBLE FOR COORDINATING WITH THE SHELTER MANUFACTURER FOR THE TIMELY DELIVERY OF THE SHELTER. THE SHELTER MANUFACTURER WILL FURNISH THE TRANSPORTATION OF THE SHELTER TO THE SITE. THE CONTRACTOR IS RESPONSIBLE FOR THE CRANE AND NECESSARY RIGGING EQUIPMENT TO PROPERLY PLACE THE SHELTER ON THE FOUNDATION.

6.01 ANCHORING:
A. FOR STANDARD CONCRETE SHELTERS ON SLAB ON GRADE OR PERIMETER BEAM FOUNDATION, THE CONTRACTOR SHALL ANCHOR THE SHELTER AS RECOMMENDED BY THE SHELTER MANUFACTURER. THE CONTRACTOR SHALL ALSO PROVIDE LABOR AND SUPERVISION NECESSARY TO ASSEMBLE SHELTER COMPONENTS REMOVED FOR SHIPPING PURPOSES. ALL SUCH WORKS PERFORMED BY THE CONTRACTOR ON THE SHELTER SHALL BE IN ACCORDANCE WITH THE SHELTER MANUFACTURER.

6.02 MISCELLANEOUS ASSEMBLY:
A. TO SATISFY DOT RESTRICTIONS, SOME ON-SITE ASSEMBLY OF SHELTER COMPONENTS, PERFORMED BY THE CONTRACTOR, MAY BE REQUIRED. THESE ITEMS INCLUDE, BUT NOT LIMITED TO, THE DOOR CANOPY AND MAIN DISCONNECT SWITCH. THE CONTRACTOR WILL BE RESPONSIBLE FOR THIS ASSEMBLY AND COORDINATION WITH THE SHELTER MANUFACTURER.

6.03 WALL, FLOOR, AND ROOF PENETRATIONS:
A. TO ONLY THOSE PENETRATIONS PROVIDED OR APPROVED BY THE SHELTER MANUFACTURER WILL BE PERMITTED. ALL PENETRATIONS FOR UTILITY SERVICES, ELECTRICAL CABLING, AND GROUNDING LEADS MUST BE SEALED WITH A SUITABLE WEATHER TIGHT COMPOUND SUCH AS DUCTSEAL OR APPROVED EQUIVALENT.

6.04 SHELTER CLEANLINESS:
A. THE CONTRACTOR IS RESPONSIBLE FOR THE CLEANLINESS OF THE SHELTER UNTIL THE DATE OF PRACTICAL COMPLETION. THE SHELTER IS NOT TO BE USED FOR STORING THE CONTRACTOR'S OR SUB-CONTRACTORS' TOOLS, EQUIPMENT OR PERSONAL PROPERTY. ON-SITE PERSONNEL SHALL LIMIT THEIR ACCESS TO THE BUILDING FOR THE PURPOSE OF PERFORMING THE WORK.
B. AT ALL TIMES, THE AMOUNT OF DUST, DIRT, AND DEBRIS INSIDE THE SHELTER SHALL BE KEPT TO AN ABSOLUTE MINIMUM. GRAVEL FOR THE SITE COMPOUND SHALL BE PLACED, AS SPECIFIED, AT THE EARLIEST POSSIBLE TIME AND PRIOR TO THE COMPLETION OF WORK INSIDE THE SHELTER.
C. DUE TO THE SITE AND WEATHER CONDITIONS AND AS DIRECTED BY THE SDM, IT MAY BECOME NECESSARY FOR THE CONTRACTOR TO PROTECT THE SHELTER FLOOR WITH PAPER, PLASTIC OR PLYWOOD FROM FOOT TRAFFIC AND MUD.

6.05 SHELTER SECURITY:
A. THE CONTRACTOR IS RESPONSIBLE FOR SECURITY OF THE SHELTER AND ALL ITS COMPONENTS UNTIL THE DATE OF PRACTICAL COMPLETION. MAINTAIN A KEYED OR COMBINATION LOCK IN ACCORDANCE WITH THE SHELTER DESIGN AND AS REQUESTED BY THE SDM FOR CARRIER USE PRIOR TO PRACTICAL COMPLETION.

T-Mobile
T-MOBILE USA, INC.
2001 BUTTERFIELD RD.
DOWNERS GROVE, IL 60515

Insite inc.
Real Estate Consulting Services
15660 MIDWEST RD.
OAKBROOK TERRACE, IL 60181

forge
FORGE SERVICES, INC.
T: (630) 451-9890
15660 MIDWEST RD. STE. 140
OAKBROOK TERRACE, IL 60181

FORGE PROJECT NO: **8009**
DRAWN BY: **AC**
CHECKED BY: **JL**

REV	DATE	DESCRIPTION
A	06/26/2020	ISSUED FOR REVIEW
0	07/21/2020	ISSUED FOR PERMIT

CONSTRUCT ONLY FROM DRAWINGS MARKED "ISSUED FOR CONSTRUCTION"

FREDERICK Y. BENJAMIN
062-033842
REGISTERED PROFESSIONAL ENGINEER OF ILLINOIS

© 2020 FORGE SERVICES, INC. ALL RIGHTS RESERVED

CH22901A
WESTERN SPRINGS WT

4900 S WILLOW SPRINGS RD.
WESTERN SPRINGS, IL 60558

WATER TOWER

GENERAL NOTES

GN3.1

THIS DRAWING IS SCALED FOR 11×17 PAPER (U.S. GOVT. "TABLOID")

PART 7 ELECTRICAL PROVISIONS
7.00 GENERAL
A. SUBMITTAL OF BID INDICATES CONTRACTOR HAS FAMILIARIZED HIMSELF WITH ALL OF JOB SITE CONDITIONS AND WORK TO BE PERFORMED UNDER THIS CONTRACT.
B. CONTRACTOR SHALL PERFORM ALL VERIFICATION OBSERVATIONS TESTS, AND EXAMINATION WORK PRIOR TO THE ORDERING OF THE ELECTRICAL EQUIPMENT AND THE ACTUAL CONSTRUCTION. CONTRACTOR SHALL ISSUE A WRITTEN NOTICE OF ALL FINDINGS TO THE ARCHITECT/ENGINEER LISTING ALL MALFUNCTIONS, FAULTY EQUIPMENT AND DISCREPANCIES.
C. HEIGHTS SHALL BE VERIFIED WITH SDM PRIOR TO INSTALLATION.
D. THESE PLANS ARE DIAGRAMMATIC ONLY; FOLLOW AS CLOSELY AS POSSIBLE.
E. EACH CONDUCTOR OF EVERY SYSTEM SHALL BE PERMANENTLY TAGGED IN EACH PANELBOARD, PULLBOX, J-BOX, SWITCH BOX, ETC. IN COMPLIANCE WITH OCCUPATIONAL SAFETY AND HEALTH ACT (O.S.H.A.).
F. CONTRACTOR SHALL PROVIDE ALL LABOR MATERIALS, INSURANCE, EQUIPMENT, INSTALLATION, CONSTRUCTION TOOLS, TRANSPORTATION, ETC. FOR A COMPLETE AND PROPERLY OPERATING SYSTEM ENERGIZED THROUGHOUT AND AS INDICATED ON DRAWINGS, AS SPECIFIED HEREIN AND/OR AS OTHERWISE REQUIRED.
G. ALL MATERIALS AND EQUIPMENT SHALL BE NEW AND IN SAFE CONDITION WHEN INSTALLED AND SHALL BE OF THE BEST GRADE AND OF THE SAME MANUFACTURER THROUGHOUT FOR EACH CLASS OR GROUP OF EQUIPMENT. MATERIALS SHALL BE LISTED "J" WHERE SUBJECT TO SUCH APPROVAL. MATERIALS SHALL MEET WITH APPROVAL OF THE DIVISION OF INDUSTRIAL SAFETY AND ALL GOVERNING BODIES HAVING JURISDICTION. MATERIALS SHALL BE MANUFACTURED IN ACCORDANCE WITH APPLICABLE STANDARDS ESTABLISHED BY ANSI, NEMA, NBFU AND "UL" LISTED.
H. CONTRACTOR SHALL PERFORM WORK IN ACCORDANCE WITH ALL GOVERNING STATE, IBC, NEC, COUNTY AND LOCAL CODES AND O.S.H.A.
I. CONTRACTOR SHALL OBTAIN ALL NECESSARY BUILDING PERMITS AND PAY ALL REQUIRED FEES PURSUANT TO THE WORK.
J. COMPLETE JOB SHALL BE GUARANTEED FOR A PERIOD OF ONE (1) YEAR AFTER THE DATE OF SITE ACCEPTANCE BY SDM. ANY WORK MATERIAL OR EQUIPMENT FOUND TO BE FAULTY DURING THAT PERIOD SHALL BE CORRECTED AT ONCE, UPON WRITTEN NOTIFICATION, AND AT THE EXPENSE OF THE CONTRACTOR.
K. ALL CONDUIT SHALL HAVE A PULL WIRE OR ROPE.
L. PROVIDE SDM WITH ONE SET OF COMPLETE ELECTRICAL "AS INSTALLED" DRAWINGS AT THE COMPLETION OF THE JOB, SHOWING ACTUAL DIMENSIONS, ROUTINGS, AND CIRCUITS.
M. ALL BROCHURES, OPERATING MANUALS, CATALOGS, SHOP DRAWINGS, ETC. SHALL BE TURNED OVER TO SDM AT JOB COMPLETION.
N. USE T-TAP CONNECTIONS ON ALL MULTICIRCUITS WITH COMMON NEUTRAL CONDUCTOR FOR LIGHTING FIXTURE.
O. ALL CIRCUIT BREAKERS, FUSES AND ELECTRICAL EQUIPMENT SHALL HAVE AN INTERRUPTING SHORT CIRCUIT CURRENT TO WHICH THEY MAY BE SUBJECTED, AND A MINIMUM OF 22,000 A.I.C.
P. THE ENTIRE ELECTRICAL INSTALLATION SHALL BE GROUNDED AS REQUIRED BY UBC, NEC AND ALL APPLICABLE CODES.
Q. PATCH, REPAIR AND PAINT ANY AREA THAT HAS BEEN DAMAGED IN THE COURSE OF THE ELECTRICAL WORK.
R. PENETRATIONS IN FIRE RATED WALLS SHALL BE FIRE STOPPED IN ACCORDANCE WITH APPLICABLE BUILDING CODES.
S. RECEPTACLES SHALL BE 10 AMPERE, 15 VOLT AC, HUBBELL 5362 WHITE. MOUNT ALL RECEPTACLES AT 18" A.F.F. OR REQUIRED BY THE SDM, OR APPROVED EQUAL.
T. WALL SWITCHES SHALL BE 15 AMPERE, 20 VOLT AC, SINGLE-POLE HUBBELL 1201.
U. PLASTIC PLATES FOR ALL SWITCH RECEPTACLES, TELEPHONE AND BLANKED OUTLETS, SHALL HAVE ENGRAVED LETTERING WHERE INDICATED ON THE DRAWINGS. WEATHERPROOF RECEPTACLES SHALL HAVE SIERRA UPD-8 LIFT COPPER PLATES.
V. WIRE AND CABLE CONDUCTORS SHALL BE COPPER 600V, TYPE THHN OR THWN, WITH A MIN. SIZE OF 12 AWG. COLOR CODES. ALL RECTIFIER DROPS SHALL BE STRANDED TO ACCEPT CRIMP CONNECTORS.
W. GROUNDING CONDUCTORS SHALL BE SOLID TINNED COPPER AND STRANDED INSULATED 2 AWG COPPER.
X. GROUND RODS SHALL BE COPPER CLAD STEEL, 5/8' ROUND AND 10' LONG. HARGER OR APPROVED EQUAL.
Y. ALL CHEMICAL GROUND RODS SHALL BE "UL" APPROVED.
Z. METER SOCKET AMPERES, VOLTAGE NUMBER OF PHASES SHALL BE AS NOTED ON THE DRAWINGS MANUFACTURED BY SQUARE "D" COMPANY OR APPROVED EQUAL.

7.01 CONDUITS:
A. RIGID CONDUIT SHALL BE UL LABEL GALVANIZED ZINC COATED WITH ZINC INTERIOR AND SHALL BE USED WHEN INSTALLED IN OR UNDER CONCRETE SLABS, IN CONTACT WITH THE EARTH, UNDER PUBLIC ROADWAYS, IN MASONRY WALLS OR EXPOSED ON BUILDING EXTERIOR. RIGID CONDUIT IN CONTACT WITH EARTH SHALL BE ½ LAPPED WRAPPED WITH HUNTS WRAP PROCESS NO. 3.
B. ELECTRICAL METALLIC TUBING SHALL HAVE UL LABEL, FITTING SHALL BE GLAND RING COMPRESS ON TYPE. EMT SHALL BE USED ONLY FOR INTERIOR RUNS.
C. FLEXIBLE METALLIC CONDUIT SHALL HAVE UL LISTED LABEL AND MAY BE USED WHERE PERMITTED BY CODE. FITTINGS SHALL BE "JAKE" OR "SQUEEZE" TYPE, SEAL TIGHT FLEXIBLE CONDUIT. ALL CONDUIT IN EXCESS OF SIX FEET IN LENGTH SHALL HAVE FULL SIZE GROUND WIRE.
D. CONDUIT RUNS MAY BE SURFACE MOUNTED IN CEILINGS OR WALLS UNLESS INDICATED OTHERWISE. CONDUIT INDICATED SHALL RUN PARALLEL OR AT RIGHT ANGELS TO CEILING, FLOOR OR BEAMS. VERIFY EXACT ROUTING OF ALL EXPOSED CONDUIT WITH ARCHITECT PRIOR TO INSTALLING.
E. ALL UNDERGROUND CONDUIT SHALL BE PVC SCHEDULE 40 OR 80 WITH UV PROTECTION UNLESS NOTED OTHERWISE. AT A MINIMUM DEPTH OF 24" BELOW GRADE IS REQUIRED AND WILL BE THE RESPONSIBILITY OF THE ELECTRICAL CONTRACTOR TO CALL JULIE 1-800-892-0123 OR OTHER SUCH NOTIFYING AGENCY FORTY EIGHT (48) HOURS PRIOR TO STARTING AND DIGGING, TRENCHING, EXCAVATION, OR OTHER SUCH EARTH REMOVAL.
F. ALL ALARMS SHALL BE (2) 22 AWG AND BE RUN FROM EACH OF THE ITEMS AS INDICATED ON DRAWINGS. THE ALARM WIRES SHALL HAVE AN ADDITIONAL LENGTH REACHING TO THE FLOOR, TAGGED AND LABELED WITH THE APPROPRIATE ALARM ITEM. ALL CONTACTS WILL BE NORMALLY CLOSED, DRY AND ISOLATED FROM GROUND. ALARM WILL BE NEATLY RUN AND SECURED EVERY THREE FEET TO WALLS AND EXISTING CABLE TRAY.
G. CONTRACTOR TO COORDINATE WITH UTILITY COMPANY FOR CONNECTION OF TEMPORARY AND PERMANENT POWER TO THE SITE. THE TEMPORARY POWER AND ALL HOOKUP COSTS TO BE PAID BY CONTRACTOR. ELECTRICAL CONTRACTOR TO SET BILLING TO BE FORWARDED TO PROPER OFFICE. INDICATE SITE NAME AND NUMBER.
H. ALL ELECTRICAL EQUIPMENT SHALL BE LABELED WITH PERMANENT ENGRAVED PLASTIC LABELS.
I. UPON COMPLETION OF WORK, CONDUCT CONTINUITY, SHORT CIRCUIT, AND FALL POTENTIAL GROUNDING TESTS FOR APPROVAL. SUBMIT TEST REPORTS TO SDM. CLEAN PREMISES OF ALL DEBRIS RESULTING FROM WORK AND LEAVE WORK IN A COMPLETE AND UNDAMAGED CONDITION.
7.02 GROUNDING ELECTRODE SYSTEM
A. PREPARATION
1. SURFACE PREPARATION:
2. ALL CONNECTIONS SHALL BE MADE TO BARE METAL. ALL PAINTED SURFACES SHALL BE FIELD INSPECTED TO ENSURE PROPER CONTACT. NO WASHERS ARE ALLOWED BETWEEN THE ITEMS BEING GROUNDED. ALL CONNECTIONS ARE TO HAVE A NON-OXIDIZING AGENT APPLIED PRIOR TO INSTALLATION.
3. GROUND BAR PREPARATION:
4. ALL COPPER GROUND BARS SHALL BE CLEANED, POLISHED AND A NON-OXIDIZING AGENT APPLIED. NO FINGER PRINTS OR DISCOLORED COPPER WILL BE PERMITTED.
5. SLEEVES:
6. ALL GROUNDING CONDUCTORS SHALL RUN THROUGH PVC SLEEVES WHEREVER CONDUCTORS RUN THROUGH WALLS, FLOORS OR CEILINGS. IF CONDUCTORS MUST RUN THROUGH EMT, BOTH ENDS OF CONDUIT SHALL BE GROUNDED. SEAL BOTH ENDS OF CONDUIT WITH SILICONE CAULK.
B. GROUND BARS
1. ALL GROUND BARS SHALL BE ¼' THICK BARE COPPER PLATE AND OF SIZE INDICATED ON DRAWINGS.
C. INTERIOR CONNECTIONS
1. ALL INTERIOR NON-ELECTRICAL MATERIALS, I.E. HVAC GRILLES, HOLLOW METAL DOOR FRAMES/DOORS, CABLE TRAYS, TELCO ENTRANCE CONDUIT (EMT ONLY), ETC. SHALL BE GROUNDED WITH 6 GREEN GROUND WIRES OR JUMPERS WITH SINGLE HOME RUNS BACK TO THE MASTER GROUND BAR (THE CABLE TRAY, DOOR/FRAME AND STEEL CHANNEL MAY BE JUMPED TOGETHER AND HAVE A SINGLE GROUND WIRE CONNECTION TO THE MASTER GROUND BAR). ALL PAINT OR DELETERIOUS MATERIAL SHALL BE REMOVED AT THE POINT OF ATTACHMENT OF ALL GROUND JUMPERS. ALL SINGLE LUG CONNECTORS MUST BE BOLT-THRU USING STAR AND LOCK WASHERS. DOUBLE LUG CONNECTORS MAY BE SCREWED WITH STAR WASHERS.
D. EXTERNAL CONNECTIONS
1. ALL GROUNDING CONNECTIONS SHALL BE MADE BY THE EXOTHERMIC WELD PROCESS. CONNECTIONS SHALL INCLUDE ALL CABLE TO CABLE, SPLICES, TEE'S, X'S, ETC. ALL CABLE TO GROUND RODS, GROUND ROD SPLICES AND LIGHTING PROTECTION SYSTEM AS INDICATED. ALL MATERIALS USED (MOLDS, WELDING METAL, TOOLS, ETC.) SHALL BE BY "CADWELD" AND INSTALLED PER MANUFACTURER'S RECOMMENDATIONS AND PROCEDURES.
2. ALL GROUNDING AND BONDING CONDUCTORS SHALL BE CONNECTED BY TWO HOLES CRIMP TYPE (COMPRESSION) CONNECTIONS (EXCEPT FOR THE ACEG AND GROUND ROD) MECHANICAL CONNECTIONS, FITTING OR CONNECTIONS THAT DEPEND SOLELY ON SOLDER SHALL NOT BE USED.
3. THE SHELTER SKIDS STEEL FRAME SHALL BE GROUNDED AT TWO LOCATIONS (OPPOSITE ENDS OF THE BUILDING) WITH A 2 SOLID-TINNED BARE COPPER WIRE CONNECTED TO THE EXTERNAL GROUND RING. ALL CONNECTIONS SHALL BE CADWELDED AND SPRAYED WITH COLD GALVANIZED PAINT.
4. WAVEGUIDE PORT AND BRIDGE SHALL BE GROUNDED TO THE EXTERNAL GROUND BAR (EGB) LOCATED BELOW THE WAVEGUIDE ENTRY PORT, WITH 6 SOLID WIRE. THESE CONNECTIONS SHALL BE DOUBLE LUG-BOLTED, SCREWED MECHANICAL CONNECTIONS WITH STAR WASHERS AND NO-OX GREASE
E. GROUND RODS
1. ALL GROUND RODS SHALL BE 5/8" DIAMETER X 10'-0' LONG "HARGER" OR APPROVED EQUAL, OF NUMBER AND LOCATIONS INDICATED ON THE PLANS. GROUND RODS SHALL BE DRIVEN FULL LENGTH VERTICAL IN UNDISTURBED EARTH. ALL GROUND RODS TO BE NO MORE THAN 10' APART UNLESS OTHERWISE NOTED.

F. CABLES
1. ALL GROUND CABLES SHALL BE STANDARD TNND SOLID BARE COPPER AND OF SIZE INDICATED ON DRAWINGS.

G. LUGS
1. LUGS SHALL BE 2-HOLE, SHORT BARREL, STRAND COPPER UNLESS OTHERWISE SPECIFIED IN THIS DOCUMENT. LUGS SHALL BE THOMAS AND BETTS SERIES 548 BE OR EQUIVALENT.
I. A. 535 MCM DLO 1880BE
II. B. 262 MCM DLO 1872BE
III. C. 1/0 DLO 4862BE
IV. D. 4/0 THWN AND BARE 4866BE
V. E. 2/0 THWN 4862BE
VI. F. 2 THHN 4207BE
VII. G. 6 DLO 1205BE
2. WHEN THE DIRECTION OF THE CONDUCTOR MUST CHANGE, IT SHALL BE DONE GRADUALLY. THE CAPTURE OF THE TURN SHALL BE DONE IN ACCORDANCE WITH THE FOLLOWING CHART:
I. GROUND CONDUCTOR SIZE MINIMUM BENDING RADIUS OF INSIDE EDGE
II. NO. 6 AWG TO NO. 4 AWG 8 INCS
III. NO. 2 AWG TO NO. 1/0 AWG 8 INCS
IV. NO. 2/0 AWG TO 750 MCM 1 FOX
V. BUSS BAR NO RESTRICTIONS

H. GROUND RING
1. THE EXTERNAL GROUND RING ENCIRCLE THE BUILDING SHALL BE MINIMUM SIZE OF NO. 2 AWG SOLID TNND BARE COPPER CONDUCTOR IN DIRECT CONTACT WITH THE EARTH AT A DEPTH OF NOT LESS THAN 24 INCHES. CONDUCTOR BENDS SHALL HAVE A MINIMUM RADIUS 8 INCHES.
2. ALL EXTERNAL GROUND RINGS ARE TO BE JOINED TOGETHER AND ALL CONNECTIONS MUST BE EXOTHERMIC WELDS. NO LUGS OR CLAMPS WILL BE ACCEPTED.
3. ASTM FALL POTENTIAL TESTS
4. FOR RAW LAND SITE
5. GROUND TESTS SHALL BE PERFORMED AS INDICATED ON DRAWINGS. A BIDDLE GROUND OHM OR THE METHOD OF USING TWO AUXILIARY GROUND ROD AS DESCRIBED IN I.E.E.E. STANDARD NO. 81-1983 PART MAY BE USED. THE I.E.E.E. METHOD REQUIRES THE USE ON A.C. TEST CURRENT. THE AUXILIARY TEST ROD MUST BE SUFFICIENTLY FAR AWAY FROM THE ROD UNDER TEST SO THAT THE REGIONS IN WHICH THEIR RESISTANCE IS LOCALIZED DO NOT OVERLAP. THE ST POINT WILL BE THE EXTERIOR TEST WELL AND CONSIST OF THE THREE POINT FULL OF POTENTIAL MEGGER 11 METHOD USING THE BIDDLE NULL-BALANCE EARTH TEST (MEGGER 250220-2 OR EQUIVALENT). RESULTS SHALL B OHMS OR LESS.
6. CONTRACTOR TO CONDUCT GROUND RESISTANCE TEST IN THE FORMAT AS FOLLOWS: (DOES NOT APPLY TO TENANT IMPROVEMENT SITES).
7. 2.1 EQUIPMENT BUILDING
8. FIRST TEST – SHALL BE WITH FOUR GROUND RODS INSTALLED, ONE AT EACH CORNER OF THE BUILDING BUT NOT CONNECTED TO THE MAIN GROUNDING BUSS. FURNISH WIRE TO CONNECT (TEMPORARY CLAMP) ALL FOUR GROUND RODS TOGETHER TO MAKE A SYSTEM TESTER. EACH ROD IS INDIVIDUALLY TESTED. IF ANY INDIVIDUAL ROD TESTS 25 OHMS OR MORE, THE ELECTRICAL CONTRACTOR AND SDM SHOULD BE NOTIFIED SO THAT THE ROD CAN BE DRIVEN DEEPER UNTIL ALL FOUR RODS HAVE A RESISTANCE OF 10 OHMS OR LESS ON A DRY DAY.
9. SECOND TEST – SHALL BE WITH THE GROUND RODS CONNECTED WITH DRY SOIL AND WHEN NO STANDING WATER HAS BEEN PRESENT FOR AT LEAST TEN DAYS. THE MAXIMUM ALLOWABLE READING IS 5 OHMS TO GROUND. IF THE RESISTANCE OF THE ELECTRICAL CONTRACTOR AND SDM SHOULD BE NOTIFIED SO THAT EITHER ADDITION AND/OR DEEPER RODS CAN BE INSTALLED.
10. 2.2 TOWER
11. FIRST TEST – SHALL BE WITH THREE GROUND RODS INSTALLED (MIN) EQUALLY SPACED AROUND THE TOWER FOUNDATION BUT NOT CONNECTED TO THE EQUIPMENT BUILDING EXTERNAL GROUND RING. FURNISH WIRE TO CONNECT (TEMPORARY CLAMP) ALL THREE GROUND RODS TOGETHER TO MAKE A SYSTEM TESTER EACH ROD IS INDIVIDUALLY TESTED. IF ANY INDIVIDUAL ROD TESTS 25 OHMS OR MORE, THE ELECTRICAL CONTRACTOR AND SDM SHOULD BE NOTIFIED SO THAT THE ROD CAN BE DRIVEN DEEPER UNTIL ALL THREE RODS HAVE A RESISTANCE OF 10 OHMS OR LESS ON A DRY DAY.
12. SECOND TEST – SHALL BE WITH THREE ROUND RODS CONNECTED WITH DRY SOIL AND WHEN NO STANDING WATER HAS BEEN PRESENT FOR AT LEAST TEN DAYS. THE MAXIMUM ALLOWABLE READING IS 5 OHMS TO GROUND. IF THE RESISTANCE OF THE ENTIRE SYSTEM EXCEEDS 5 OHMS THE ELECTRICAL CONTRACTOR AND SDM SHOULD BE NOTIFIED SO THAT EITHER ADDITION AND/OR DEEPER RODS CAN BE INSTALLED.
13. 2.3 EQUIPMENT BUILDING AND TOWER
14. AFTER THE EQUIPMENT BUILDING AND TOWER GROUND RESISTANCE TEST IS COMPLETED, ELECTRICAL CONTRACTOR SHALL TIE EQUIPMENT BUILDING EXTERNAL GROUND RING AND TOWER EXTERNAL GROUND RING TOGETHER. AFTER FIRST AND SECOND TEST ALL CONNECTIONS MUST HAVE EXOTHERMIC WELDS. NO LUGS OR CLAMPS WILL BE ACCEPTED.
15. AFTER ALL THE EXTERNAL GROUND RINGS ARE TIED TOGETHER BUT BEFORE THE EQUIPMENT BUILDING IS TIED DOWN, A MEGGER CHECK OF THE GROUND SYSTEM SHOULD BE PERFORMED. THE MAXIMUM ALLOWABLE READING IS 5 OHMS TO GROUND.

GROUNDING RESISTANCE TEST REPORT
1. UPON COMPLETION OF THE TESTING FOR EACH SITE, A TEST REPORT SHOWING RESISTANCE IN OHMS WITH AUXILIARY POTENTIAL ELECTRODES AT 5 FEET AND 10 FEET INTERVALS UNTIL THE AVERAGE RESISTANCE STARTS INCREASING AND ALSO NOTE THAT 10-15 PHOTOS MUST BE TAKEN TO PROOF ENTIRE EXTERNAL GROUND RING SYSTEM BEFORE BACKFILL AND NOTIFY SDM NO LESS THAN 48 HOURS IN ADVANCE OF BACKFILL TESTING SHALL BE COMPLETED BY GENERAL CONTRACTOR AND TWO (2) SETS OF DOCUMENTS ARE TO BE BOUND AND SUBMITTED WITHIN ONE (1) WEEK OF WORK COMPLETION.

PART 8 TELCO SERVICE
8.00 GENERAL
A. APPLICATION FOR TELEPHONE SERVICE WILL BE MADE BY THE SDM. THE CONTRACTOR IS RESPONSIBLE FOR PROVIDING ALL MATERIALS AND ASSOCIATED LABOR FOR CONNECTION FROM THE TELCO SOURCE TO THE SHELTER AS PER THE CONSTRUCTION PLANS.

B. PROVIDE A 2 INCH DIAMETER SCHEDULE 40 PVC PIPE FROM THE SHELTER TELCO ENTRY TO A LOCATION INDICATED ON THE CONSTRUCTION PLANS. PLUG OR CAP EACH END OF THE PIPE AND PROVIDE TWO SEPARATE PULL STRINGS SECURELY FASTENED AT EACH END OF THE PIPE. PULL STRINGS SHALL BE 200 LB TEST POLYETHYLENE CORD.

PART 9 FENCE
9.00 GENERAL
A. REFER TO THE SITE PLANS FOR TYPE SIZE AND LOCATION OF FENCE TO BE INSTALLED.

9.01 RELATED WORK:
A. COORDINATE FENCE GROUNDING WITH ELECTRICAL CONTRACTOR
B. REFER TO DIVISION 2 FOR SPECIFICATION OF CONCRETE

9.02 DESCRIPTIONS:
A. A SECURITY FENCE IS PROVIDED IN ORDER TO INHIBIT UNAUTHORIZED ACCESS TO THE SITE.

9.03 QUALITY ASSURANCE:
A. THE CONTRACTOR SHALL ESTABLISH THE LEGAL BOUNDARY AND LOCALLY REQUIRED SETBACKS ON THE CARRIER PARCEL AND HOLD THE FENCE WITHIN THAT BOUNDARY IN ACCORDANCE WITH THE LINES AND DIMENSIONS OUTLINED ON THE CONSTRUCTION PLANS. WHERE CONFLICTS BETWEEN THE CONSTRUCTION PLANS AND LEGAL REQUIREMENTS EXIST, THE CONTRACTOR SHALL SEEK DIRECTION FROM THE SDM PRIOR TO PERFORMING THE WORKS.

B. MEMBER SIZES, FABRIC TYPES, CONNECTION DETAILS, SECURITY MEASURES, AND LOCATION OF GATES MUST STRICTLY ADHERE TO THE SPECIFICATIONS.
C. ALL STEEL MATERIALS UTILIZED IN CONNECTION WITH THIS SPECIFICATION WILL BE GALVANIZED OR STAINLESS STEEL. WEIGHT OF ZINC COATING ON THE FENCE FABRIC SHALL BE NOT LESS THAN 12 OUNCES PER SQUARE FOOT OF MATERIAL. COVERED POSTS SHALL BE HOT-DIPPED IN GRADE "E" ZINC, 18 OUNCES PER SQUARE FOOT.

9.04 SEQUENCING:
A. IF THE SITE AREA HAS BEEN BROUGHT UP TO SURFACE COURSE ELEVATION PRIOR TO FENCE CONSTRUCTION, FENCE POST EXCAVATION SPOILS MUST BE CONTROLLED TO PRECLUDE CONTAMINATION OF SAID SURFACE COURSE.

9.05 SUBMITTALS:
A. MANUFACTURER'S DESCRIPTIVE LITERATURE
B. CERTIFICATE OF COMPLIANCE THAT SPECIFICATIONS HAVE BEEN MET.

COAX/ANTENNA INSTALLATION & TESTING REQUIREMENTS

A. COAX TO BE INSTALLED PER MANUFACTURER'S STANDARDS. DIN CONNECTORS TO BE USED INSIDE & OUTSIDE.
B. ANTENNA TEST RESULTS (SUPPLIED WITH ANTENNA) NOTING ANTENNA LOCATION TO BE SUBMITTED TO OWNER.
C. FINAL AZIMUTHS & TILTS TO BE VERIFIED PER FINAL SITE DATA SHEET PROVIDED BY PROJECT MANAGER.
D. WRITTEN SURVEYOR REPORT VERIFYING FINAL ANTENNA AZIMUTHS TO BE SUBMITTED TO OWNER.

COAX/ANTENNA NOTES

A. ALL COAXIAL CABLE CONNECTORS AND TRANSMITTER EQUIPMENT SHALL BE AS SPECIFIED BY THE OWNER. THE CONTRACTOR SHALL FURNISH ALL CONNECTION HARDWARE REQUIRED TO SECURE THE CABLES.

B. NORTH ARROW SHOWN ON PLANS REFERS TO PLAN NORTH. CONTRACTOR SHALL VERIFY TRUE NORTH AND INFORM CONSTRUCTION MANAGER OF ANY DISCREPANCIES BEFORE STARTING CONSTRUCTION.

ITEMS TO BE PROVIDED TO OWNER BY CONTRACTOR AT SITE INSPECTION
A. AS-BUILT DRAWINGS
B. ANTENNA VERIFICATION FORM
C. SWEEP TEST RESULTS
D. GROUND TEST RESULTS
E. SITE PHOTOS
F. CONTACT NUMBERS

T-Mobile
T-MOBILE USA, INC.
2001 BUTTERFIELD RD.
DOWNERS GROVE, IL 60515

Insite inc.
Real Estate Consulting Services
15660 MIDWEST RD.
OAKBROOK TERRACE, IL 60181

forge
FORGE SERVICES, INC.
T: (630) 451-9890
15660 MIDWEST RD. STE. 140
OAKBROOK TERRACE, IL 60181

FORGE PROJECT NO: **8009**
DRAWN BY: **AC**
CHECKED BY: **JL**

REV	DATE	DESCRIPTION
A	06/26/2020	ISSUED FOR REVIEW
0	07/21/2020	ISSUED FOR PERMIT

CONSTRUCT ONLY FROM DRAWINGS MARKED "ISSUED FOR CONSTRUCTION"

FREDERICK Y. BENJAMIN
062-033842
REGISTERED PROFESSIONAL ENGINEER OF ILLINOIS

© 2020 FORGE SERVICES, INC. ALL RIGHTS RESERVED

CH22901A
WESTERN SPRINGS WT

4900 S WILLOW SPRINGS RD.
WESTERN SPRINGS, IL 60558

WATER TOWER

GENERAL NOTES

GN4.1

THIS DRAWING IS SCALED FOR 11×17 PAPER (U.S. GOVT. "TABLOID")

July 13, 2020

John Lamberes
Forge Services, Inc.
1S660 Midwest Rd. Ste. 140
Oakbrook Terrace, IL 60181
(630) 688-1281

B+T Group
1717 S. Boulder, Suite 300
Tulsa, OK 74119
(918) 587-4630
btwo@btgrp.com

Subject:	**Water Tower - Structural Analysis**	
Carrier Designation:	**Site Number:**	CH22901A
	Site Name:	Western Springs WT
Engineering Firm Designation:	**B+T Group Project Number:**	143955.002.01
Site Data:	**300 48th Street, Western Springs, IL 60558, Cook County** **Latitude *41.80271°*, Longitude *-87.89152°*** **Water Tank (104.5')**	

Dear Mr. Lamberes,

B+T Group is pleased to submit this **"Water Tower Structural Analysis Report"** to determine the structural integrity of the above-mentioned water tower supported telecommunications site.

The purpose of the analysis is to determine acceptability of the water tower to sufficiently support the telecommunications equipment presented in this report. Based on our analysis we have determined the suitability for the structure, under the following load case, to be:

Existing + Proposed Equipment **Sufficient Capacity**
Note: See Table 1 for the proposed and existing loading, respectively.

The analysis has been performed in accordance with the ASCE 7 standard and the 2009 International Building Code based upon a wind speed of 90 mph 3-second gust.

All equipment proposed in this report shall be installed in accordance with the drawings for the determined available structural capacity to be effective.

We at *B+T Group* appreciate the opportunity of providing our continuing professional services to you and *Forge Services, Inc*. If you have any questions or need further assistance on this or any other projects, please give us a call.

Structural Analysis prepared by: Joseph Variamparampil

Respectfully submitted by: B&T Engineering, Inc.
COA: 184.004962 Expires: 04/30/2021

LICENSED STRUCTURAL ENGINEER
John W. Kelly III
081-005685
STATE OF ILLINOIS
7/13/20

John W. Kelly, P.E., S.E.

TABLE OF CONTENTS

11) INTRODUCTION

2) ANALYSIS CRITERIA
Table 1 - Proposed and Existing Equipment Information
Table 2 - Documents Provided

3) ANALYSIS PROCEDURE
3.1) Analysis Method
3.2) Assumptions

4) ANALYSIS RESULTS
4.1) Recommendations

5) APPENDIX A
Calculations & Results

1) INTRODUCTION

The proposed telecommunications equipment will be installed on mounts at 95 ft. elevation of the water tower at 300 48th Street, Western Springs, IL 60558, Cook County. The proposed antenna loading information was obtained from Forge Services, Inc. All information provided to B+T Group was assumed accurate and complete.

2) ANALYSIS CRITERIA

The structural analysis was performed for this structure in accordance with the 2009 International Building Code and the ASCE 7 Design Standard. The TIA-222-H applies to telecommunications towers. Although telecommunications equipment is present, this structure is primarily a water tower and is more appropriately assessed with the ASCE 7 Standard. The wind speed for this location is 90 mph 3-second gust.

Table 1 - Antenna and Equipment Information

Loading	RAD Center Elev. (ft.)	Position	Qty.	Manufacturer	Model / Type	Note
Proposed	97	3	3	Nokia	AAHF	1
		1	3	Nokia	AHFIG	2
		-	1	Nokia	HCS 2.0	3
Existing	97	1	3	Commscope	FFHH-65C-R3	4
		2	3	Nokia	AAFIA	
		1	3	Nokia	AHLOA	
		-	3	Nokia	HCS 2.0	
	--	--	26	--	Panel Antennas	5
		--	12	--	Equipment	

Note:
(1) Proposed Antenna to be installed on the Existing Mount Pipe.
(2) Proposed Equipment to be installed directly behind the Antenna.
(3) Proposed Equipment installed on the Mount.
(4) Existing Equipment installed on the Mount.
(5) Existing Equipment by other carriers

Table 2 – Documents Provided

Documents	Remarks	Reference	Source
RFDS	Existing Loading Proposed Loading	Date: 06/13/2020	Forge Services, Inc.
Structural Calculations (Previous analysis report)	Krech Ojard & Associates	Date: 11/30/2018	Forge Services, Inc.
Mount Analysis Report	B+T Group	Date: 07/10/2020	On File

3) ANALYSIS PROCEDURE

3.1) Analysis Method

This water tower is a substantial structure designed and fabricated to support thousands of gallons of water in addition to its own self weight. The new antennas will be mounted on mounts on the face of the tank. The mount was not analyzed and is not part of the scope of this report. The nature and intended purpose of the structure is substantially greater than the addition of the telecommunication equipment. Seismically the additional weight of the telecom equipment is approximately 5032 lbs. This increase in weight is negligible when compared to the weight of the water tank.

The increase in the overturning moment due to telecommunication equipment is approximately 9.1%. As the overturning moment due to additional equipment on water tower is less than 10%, the structure is sufficient to support the proposed loading configuration.
The increase in seismic loads acting on water tower due to the proposed configuration is 0.0395%. This increase is negligible when compared with the overall structural demand required of the water tower.

3.2) Assumptions

1) The structure has been maintained and is free of damage.
2) The configuration of antennas, transmission cables, mounts and other appurtenances are as specified in Tables 1 and 2 and the referenced drawings.
3) Existing loading was assumed based on final proposed loading.
4) Mount areas and weights are assumed based on photographs, drawings or mapping data provided.
5) Number of existing antenna and equipment is obtained from previous analysis dated 11/30/2018.
6) Area of existing antenna and equipment is obtained from previous analysis dated 11/30/2018.

This analysis may be affected if any assumptions are not valid or have been made in error. B+T Group should be notified to determine the effect on the structural integrity of the structure.

4) ANALYSIS RESULTS

4.1) Recommendations

As per the comparative analysis in this report, the water tower has sufficient capacity to carry the proposed loading configuration.

APPENDIX A

PROJECT	**143955.002.01 - Western Springs CH22901JV**		
SUBJECT	**WATER TOWER CALCULATIONS**		
DATE	**07/13/20**	PAGE 1	OF 2

B+T GRP
1717 S. Boulder, Suite 300
Tulsa, OK 74159
(918) 587-4630

ASSESS IMPACT OF TELECOM EQUIPMENT ON WATER TOWER USING ASCE 7 STANDARD

WIND = 90
EXP = C
Ht = 104.5
q = 0.00256 Kz Kzt Kd V^2 I

I =	1.2	G =	1
K_d =	0.95	C_f =	0.6
K_{zt} =	1.0	Kz=	1.27

q_z = 22.65 K_z
p = q_z G C_f = 13.592 K_z

H	K_z	q_z	P	W	A	F	l	M
ft	-	psf	psf	ft	ft^2	lbs	ft	ft-lbs
105	1.28	28.94	14.76	58.00	757.625	11181	101.23438	1131948
98	1.26	28.55	14.56	58.00	378.8125	5515	94.703125	522,314
91	1.24	28.14	14.35	58.00	378.8125	5436	88.171875	479,280
85	1.22	27.70	14.13	58.00	378.8125	5352	81.640625	436,908
78	1.20	27.24	13.89	58.00	378.8125	5262	75.109375	395,239
72	1.18	26.74	13.64	58.00	378.8125	5167	68.578125	354,320
65	1.16	26.21	13.37	58.00	378.8125	5064	62.046875	314,207
59	1.13	25.64	13.07	58.00	378.8125	4953	55.515625	274,965
52	1.10	25.01	12.75	58.00	378.8125	4832	48.984375	236,674
46	1.07	24.32	12.40	58.00	378.8125	4698	42.453125	199,432
39	1.04	23.54	12.01	58.00	378.8125	4548	35.921875	163,361
33	1.00	22.65	11.55	58.00	378.8125	4376	29.390625	128,626
26	0.95	21.61	11.02	58.00	378.8125	4176	22.859375	95,452
20	0.90	20.34	10.38	58.00	378.8125	3930	16.328125	64,173
13	0.82	18.68	9.53	58.00	378.8125	3609	9.796875	35,353
7	0.71	16.14	8.23	58.00	378.8125	3119	3.265625	10,184
0	0.00	0.00	0.00	58.00	0	0	0	0

Total Moment 4,842,437 Ft-Lbs

Determine amount of moment generated by telecom equipment

Equipment	q_z	A	C_f	F	M
-	psf	ft^2	-	lbs	ft-lbs
COMMSCOPE FFHH-65C-R3	28.49	6.19	1.35	476	46210
NOKIA TME-AHLOA	28.49	1.14	1.31	85	8,248
NOKIA AHFIG	28.49	1.07	1.32	81	7,830
NOKIA AAFIA	28.49	5.94	1.33	450	43,633
NOKIA AAHF	28.49	1.72	1.30	127	12,340
NOKIA HCS 2.0	28.49	0.36	1.31	35	3,432
Other Carriers					
Panel Antennas	28.49	3.00	1.83	2711	262,961
Other Equipment	28.49	2.00	1.30	593	57,478

Note:

1) Projected area (A) is calculated using height of the equipment and side width of the equipment. Front width of equipment does not change the projected area of the tank as it is parallel to the tank surface.

2) Number of existing antennas and equipment and size of antennas and equipment by other carriers are obtained from previous analysis dated 11/30/2018.

K_z = 1.26
q_z = 28.49 psf
H = 97 ft

Total Moment = 442,133 Ft-Lbs
Percent Increase = 9.1%

The effect of the telecommunications equipment on the tower has a 9.1% increase above the independent wind loading on the tower. This is an acceptable increase and does not necessarily reflect an overstress on the tower. Since increase in overturning moment due to the telecommunication equipment is less than 10%, the structure will have sufficient capacity to support the proposed loading configuration.

PROJECT	**143955.002.01 - Western Springs CH22901A**				**JV**
SUBJECT	**WATER TOWER CALCULATIONS**				
DATE	**07/13/20**	PAGE	2	OF	2

B+T GRP
1717 S. Boulder, Suite 300
Tulsa, OK 74159
(918) 587-4630

Siesmic Load Calculation

Occupancy Category= **III**
Importance Factor= **1.5**

Site Class= **D** ASCE 7 Table 20.3.1

S_s= **0.148**
S_1= **0.064**

F_a= **1.6** S_{ds}= **0.158** S_{m1}= **0.155**
F_v= **2.4** S_{ms}= **0.237** S_{D1}= **0.103**

Component Amplification Factor (a_p)= **1** Table 13.5-1

h= **104.5** ft. z/h= **0.92823**
z= **97** ft.

Component Response Modification Factor (R_p)= **2.5** Table 13.5-1

W_p= **5032** lbs.

F_p= **545.050831**

Seismic Base Shear, V= C_s*W (12.8-1)

C_s= **0.095** (12.8-2)

W= **14545715** lbs.

V= **1378933.782** lbs.

Percentage Increase, F_p/V= **0.03953** %

The effect of the telecommunications equipment on the tower has a 0.0395% increase above the seismic loading on the tower. This is an acceptable increase and does not necessarily reflect an overstress on the tower. By comparision, it can be seen that the wind load govers and the loads due to proposed and existing equipment's is less than 5% of the overall water tank. Therefore, the structure has sufficient capacity to carry the existing and proposed loads.

July 10, 2020

John Lamberes
Forge Services, Inc.
1S660 Midwest Rd. Ste. 140
Oakbrook Terrace, IL 60181
(630) 688-1281

B+T Group
1717 S. Boulder, Suite 300
Tulsa, OK 74119
(918) 587-4630
btwo@btgrp.com

Subject:	**Appurtenance Mount Analysis Report**	
Carrier Designation:	**Site Number:** **Site Name:**	CH22901A Western Springs WT
Engineering Firm Designation:	**B+T Group Project Number:**	143955.001.01
Site Data:	**300 48th Street, Western Springs, IL 60558, Cook County** **Latitude *41.80271°*, Longitude *-87.89152°*** **Water Tank** **(3) 12' Face Mount**	

Dear Mr. Lamberes,

B+T Group is pleased to submit this **"Appurtenance Mount Analysis Report"** to determine the structural integrity of the antenna mount on the above-mentioned structure.

The purpose of the analysis is to determine acceptability of the mount's stress level. Based on our analysis we have determined the stress level for the mount under the following load case to be:

Existing + Proposed Equipment Note: See Table 1 for the final loading configuration	**Sufficient Capacity** **(Passing at 56.3%)**

The jurisdiction has adopted the 2009 International Building Code. This analysis has been performed in accordance with the ANSI/TIA-222-H Standard.

All the equipment proposed in this report shall be installed in accordance with the drawings for the determined available structural capacity to be effective.

We at *B+T Group* appreciate the opportunity of providing our continuing professional services to you and *Forge Services, Inc*. If you have any questions or need further assistance on this or any other projects, please give us a call.

Mount structural analysis prepared by: Joseph Variamparampil

Respectfully submitted by: B&T Engineering, Inc.
COA: 184.004962 Expires: 04/30/2021

LICENSED STRUCTURAL ENGINEER
John W. Kelly III
081-006633
STATE OF ILLINOIS

7/10/20

John W. Kelly, P.E., S.E.

TABLE OF CONTENTS

1) INTRODUCTION

2) ANALYSIS CRITERIA
Table 1 - Proposed and Existing Equipment Information
Table 2 - Documents Provided

3) ANALYSIS PROCEDURE
3.1) Analysis Method
3.2) Assumptions

4) ANALYSIS RESULTS
Table 3 – Mount Component Stresses vs. Capacity

5) RECOMMENDATIONS

6) APPENDIX A
RISA-3D Output

1) INTRODUCTION

The appurtenance mount consists of face mount at 97 ft., attached to water tank at 300 48th Street, Western Springs, IL, 60558, Cook County. The proposed antenna loading information was obtained from Forge Services, Inc. All information provided to B+T Group was assumed accurate and complete.

2) ANALYSIS CRITERIA

The structural analysis was performed for this mount in accordance with the ANSI/TIA-222-H-2017 Structural Standard for Antenna Supporting Structures and Antennas and Small Wind Turbine Support Structures using a 3-second gust wind speed of 107 mph with no ice and 40 mph with 1.5 inch escalated ice thickness Exposure Category C & Topographic Category 1 and Risk Category II were used in this analysis. In addition, the face mounts have been analyzed for various live loading conditions consisting of a 250-lb man live load applied individually at the midpoint and cantilevered ends of horizontal members as well as a 500-pound man live load applied individually at mount pipe locations using a 3-second gust of 30mph. The mount was analyzed under 30º increments in the wind direction. The analyzed loading is detailed in Table 1.

Table 1 – Proposed and Existing Equipment Information

Loading	RAD Center Elev. (ft.)	Position	Qty.	Manufacturer	Model / Type	Note
Proposed	97	3	3	Nokia	AAHF	1
		1	3	Nokia	AHFIG	2
		-	1	Nokia	HCS 2.0	3
Existing	97	1	3	Commscope	FFHH-65C-R3	4
		2	3	Nokia	AAFIA	
		1	3	Nokia	AHLOA	
		-	3	Nokia	HCS 2.0	

Note:
(1) Proposed Antenna to be installed on the Existing Mount Pipe.
(2) Proposed Equipment to be installed directly behind the Antenna.
(3) Proposed Equipment installed on the Mount.
(4) Existing Equipment installed on the Mount.

Table 2 – Documents Provided

Documents	Remarks	Reference	Source
RFDS	Existing Loading Proposed Loading	Date: 06/13/2020	Forge Services, Inc.
Previous MA	Krech Ojard & Associates	Date: 11/30/2018	Forge Services, Inc.

3) ANALYSIS PROCEDURE

3.1) Analysis Method

RISA-3D (Version 17.0.4), a commercially available analysis software package, was used to create a three-dimensional model of the mount and calculate member stresses and deflections for various loading cases. Selected output from the analysis is included in Appendix A.

3.2) Assumptions

1. The mount was built in accordance with the manufacturer's specifications.
2. The mount has been maintained in accordance with the manufacturer's specifications and is free of damage.
3. The configuration of antennas and other appurtenances are as specified in Table 1.

4. All mount components have been assumed to be in sufficient condition to carry their full design capacity for the analysis.
5. Mount areas and weights are determined from field measurements, standard material properties, and/or manufacturer product data.
6. Serviceability with respect to antenna twist, tilt, roll or lateral translation is not checked and is left to the carrier or tower owner to ensure conformance.
7. All prior structural modifications, if any are assumed to be correctly installed and fully effective.
8. All member connections are assumed to have been designed to meet or exceed the load carrying capacity of the connected member unless otherwise specified in this report.
9. The following material grades were assumed (Unless Noted Otherwise):
   a) Connection Bolts : ASTM A325
   b) Steel Pipe : ASTM A53 (GR. 35)
   c) HSS (Round) : ASTM 500 (GR. B-42)
   d) HSS (Rectangular) : ASTM 500 (GR. B-46)
   e) Channel : ASTM A36 (GR. 36)
   f) Steel Solid Rod : ASTM A36 (GR. 36)
   g) Steel Plate : ASTM A36 (GR. 36)
   h) Steel Angle : ASTM A36 (GR. 36)
   i) UNISTRUT : ASTM A570 (GR. 33)

This analysis may be affected if any assumptions are not valid or have been made in error. B+T Group should be notified to determine the effect on the structural integrity of the antenna mounting system.

4) ANALYSIS RESULTS

Table 3 – Mount Component Stresses vs. Capacity

Notes	Component	Elevation (ft.)	% Capacity	Pass / Fail
-	Face Horizontals	97	49.5	Pass
-	Mount Pipes	97	56.3	Pass
-	Connection Pipe	97	11.3	Pass
-	Connection Plates	97	52.7	Pass
-	Tieback	97	4.0	Pass

5) RECOMMENDATIONS

The mount has sufficient capacity to carry the existing and proposed loads and is in compliance with the ANSI/TIA-222-H standard for the proposed, reserved and existing loading. (Refer to the RISA output for the specific members).

APPENDIX A

(RISA-3D Output)

Envelope Only Solution

B+T Group	CH22901A - Western Springs WT	SK - 1
JV		July 10, 2020 at 9:07 AM
143955.001.01		143955_001_01_Western Springs ...

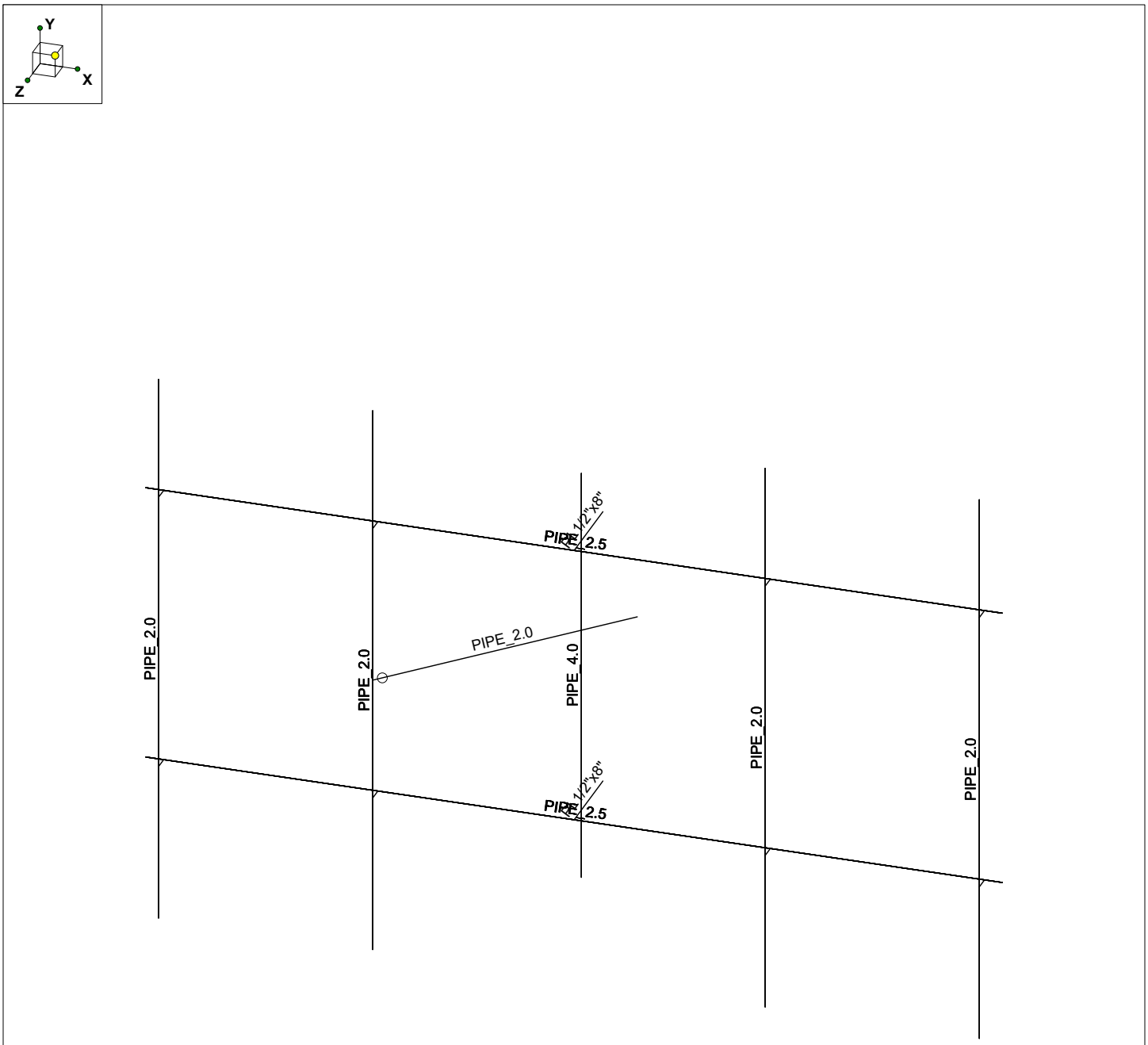

Envelope Only Solution

B+T Group	CH22901A - Western Springs WT	SK - 2
JV		July 10, 2020 at 9:07 AM
143955.001.01		143955_001_01_Western Springs ...

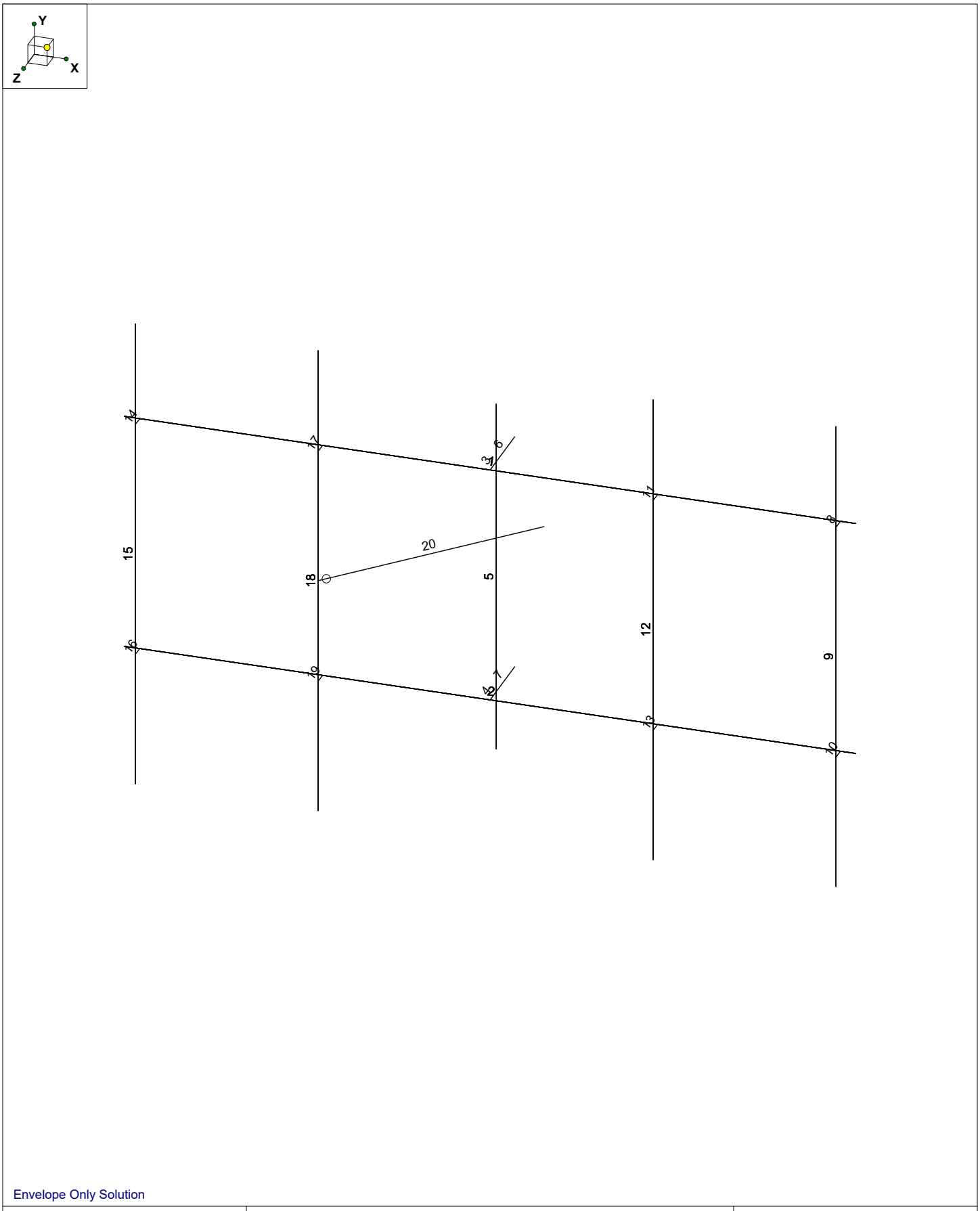

Envelope Only Solution

B+T Group	CH22901A - Western Springs WT	SK - 3
JV		July 10, 2020 at 9:07 AM
143955.001.01		143955_001_01_Western Springs ...

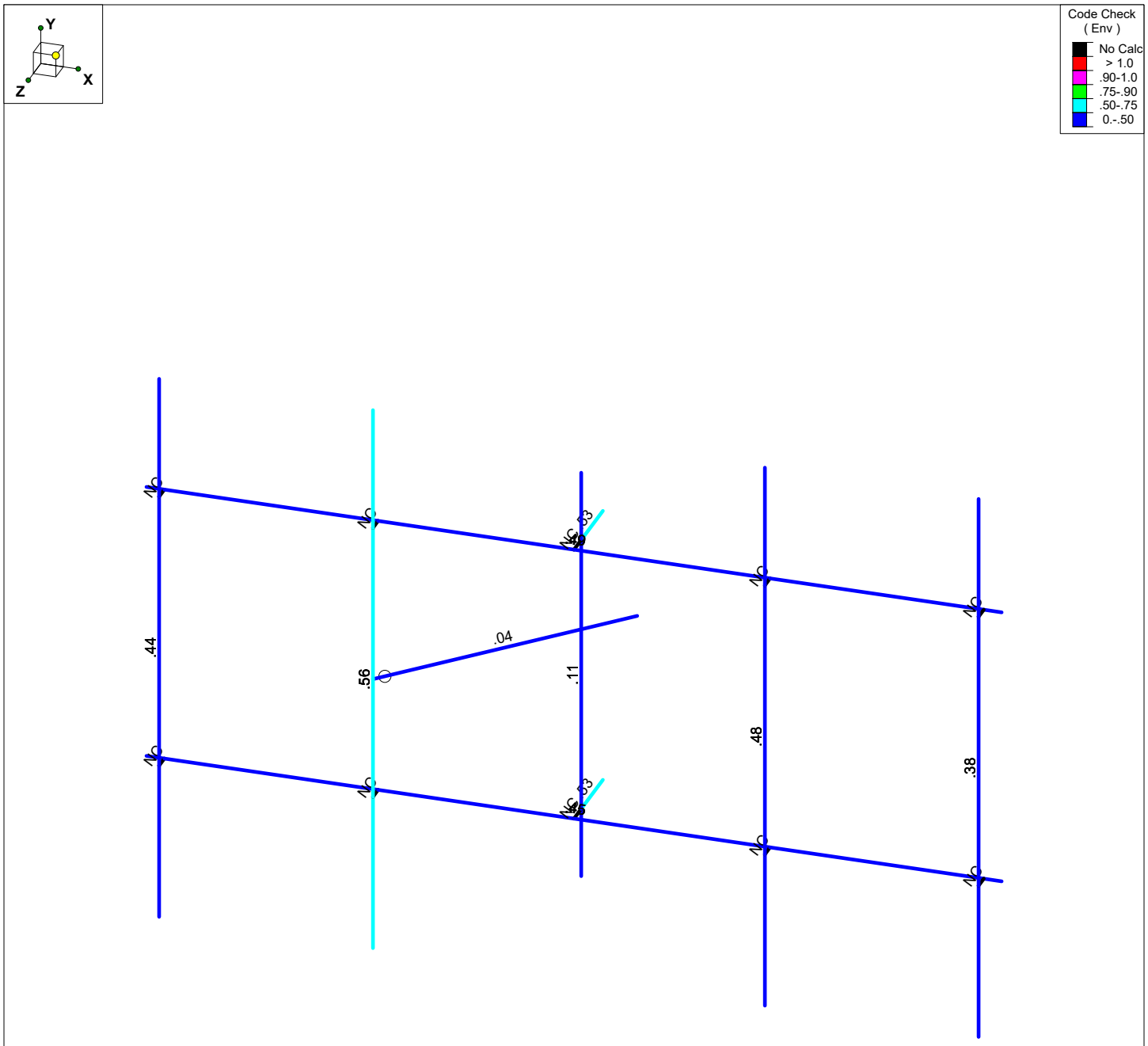

Member Code Checks Displayed (Enveloped)
Envelope Only Solution

B+T Group	CH22901A - Western Springs WT	SK - 4
JV		July 10, 2020 at 9:08 AM
143955.001.01		143955_001_01_Western Springs ...

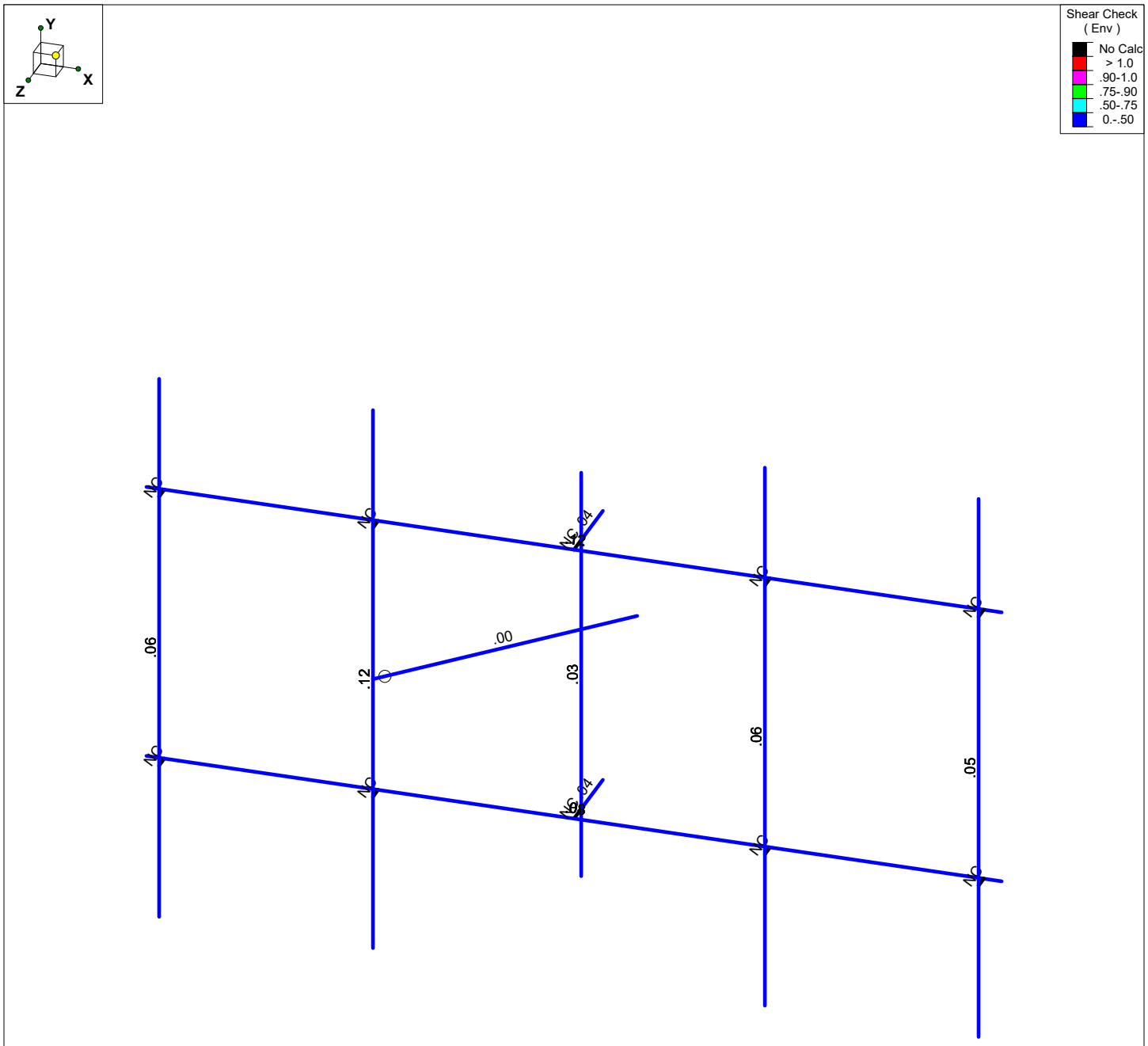

Member Shear Checks Displayed (Enveloped)
Envelope Only Solution

B+T Group	CH22901A - Western Springs WT	SK - 5
JV		July 10, 2020 at 9:08 AM
143955.001.01		143955_001_01_Western Springs ...

PROJECT	**143955.001.01 - Western Spr**		**KSC**
SUBJECT	**Face Mount Mount Analysis**		
DATE	**07/10/20**	PAGE	OF

B+T GRP
1717 S. Boulder, Suite 300
Tulsa, OK 74159
(918) 587-4630

Tower Type		:	Other		
Ground Elevation	z_s	:	679	ft	[ASCE7 Hazard Tool]
Tower Height		:	104.50	ft	
Mount Elevation		:	97.00	ft	
Antenna Elevation		:	97.00	ft	
Crest Height		:	0	ft	
Risk Category		:	II		[Table 2-1]
Exposure Category		:	C		[Sec. 2.6.5.1.2]
Topography Category		:	1.00		[Sec. 2.6.6.2]
Wind Velocity	V	:	107	mph	[ASCE7 Hazard Tool]
Ice wind Velocity	V_i	:	40	mph	[ASCE7 Hazard Tool]
Service Velocity	V_s	:	30	mph	[ASCE7 Hazard Tool]
Base Ice thickness	t_i	:	1.50	in	[ASCE7 Hazard Tool]
Seismic Design Cat.		:	B		[ASCE7 Hazard Tool]
	S_S	:	0.13		
	S_1	:	0.07		
	S_{DS}	:	0.14		
	S_{D1}	:	0.10		

Gust Factor	G_h	:	1.00		[Sec. 16.6]
Pressure Coefficient	K_z	:	1.26		[Sec. 2.6.5.2]
Topography Factor	K_{zt}	:	2.34		[Sec. 2.6.6]
Elevation Factor	K_e	:	0.98		[Sec. 2.6.8]
Directionality Factor	K_d	:	0.95		[Sec. 16.6]
Shielding Factor	K_a	:	0.90		[Sec. 16.6]
Design Ice Thickness	t_{iz}	:	1.67	in	[Sec. 2.6.10]

Importance Factor	I_e	:	1		[Table 2-3]
Response Coefficient	C_s	:	0.068		[Sec. 2.7.7.1]
Amplification	A_s	:	3		[Sec. 16.7]

PROJECT	143955.001.01 - Western Spr		KSC
SUBJECT	Face Mount Mount Analysis		
DATE	07/10/20	PAGE	OF

B+T GRP
1717 S. Boulder, Suite 300
Tulsa, OK 74159
(918) 587-4630

Manufacturer	Model	Qty	Aspect Ratio	C_a flat/round	EPA_N (ft^2)	EPA_T (ft^2)	$EPA_{N\text{-}Ice}$ (ft^2)	$EPA_{T\text{-}Ice}$ (ft^2)	$F_{A\ No\ Ice\ (N)}$	$F_{A\ No\ Ice\ (T)}$	$F_{A\ Ice\ (N)}$	$F_{A\ Ice\ (T)}$
COMMSCOPE	FFHH-65C-R3	0.5	3.81	1.26	8.39	3.10	9.84	4.36	0.32	0.12	0.05	0.02
COMMSCOPE	FFHH-65C-R3	0.5	3.81	1.26	8.39	3.10	9.84	4.36	0.32	0.12	0.05	0.02
NOKIA	TME-AHLOA	1	1.82	1.20	1.86	1.14	2.73	1.90	0.07	0.04	0.01	0.01
NOKIA	AHFIG	1	2.06	1.20	2.57	1.07	3.60	1.92	0.09	0.04	0.01	0.01
NOKIA	AAFIA	0.5	2.83	1.21	6.44	2.97	7.62	3.98	0.24	0.11	0.03	0.02
NOKIA	AAFIA	0.5	2.83	1.21	6.44	2.97	7.62	3.98	0.24	0.11	0.03	0.02
NOKIA	AAHF	0.5	1.30	1.20	1.75	0.86	2.32	1.31	0.06	0.03	0.01	0.00
NOKIA	AAHF	0.5	1.30	1.20	1.75	0.86	2.32	1.31	0.06	0.03	0.01	0.00
NOKIA	HCS 2.0	1	1.57	1.20	1.13	0.36	1.82	0.88	0.04	0.01	0.01	0.00
NOKIA	HCS 2.0	1	1.57	1.20	1.13	0.36	1.82	0.88	0.04	0.01	0.01	0.00

Hot Rolled Steel Properties

	Label	E [ksi]	G [ksi]	Nu	Therm (...	Density[...	Yield[ksi]	Ry	Fu[ksi]	Rt
1	A992	29000	11154	.3	.65	.49	50	1.1	65	1.1
2	A36 Gr.36	29000	11154	.3	.65	.49	36	1.5	58	1.2
3	A572 Gr.50	29000	11154	.3	.65	.49	50	1.1	65	1.1
4	A500 Gr.B RND	29000	11154	.3	.65	.527	42	1.4	58	1.3
5	A500 Gr.B Rect	29000	11154	.3	.65	.527	46	1.4	58	1.3
6	A53 Gr.B	29000	11154	.3	.65	.49	35	1.6	60	1.2
7	A1085	29000	11154	.3	.65	.49	50	1.4	65	1.3

Hot Rolled Steel Section Sets

	Label	Shape	Type	Design List	Material	Design ...	A [in2]	Iyy [in4]	Izz [in4]	J [in4]
1	MF-H1	PIPE_2.5	Beam	Pipe	A53 Gr.B	Typical	1.61	1.45	1.45	2.89
2	MF-P1	PIPE_2.0	Column	Pipe	A53 Gr.B	Typical	1.02	.627	.627	1.25
3	F1-P1	PIPE_4.0	Column	Pipe	A53 Gr.B	Typical	2.96	6.82	6.82	13.6
4	F1-C1	PL1/2"x8"	Beam	RECT	A36 Gr.36	Typical	4	.083	21.333	.32
5	Tieback	PIPE_2.0	Beam	Pipe	A53 Gr.B	Typical	1.02	.627	.627	1.25

Joint Coordinates and Temperatures

	Label	X [ft]	Y [ft]	Z [ft]	Temp [F]	Detach From Diap...
1	1	-6	0	1.224167	0	
2	2	6	0	1.224167	0	
3	3	6	-4	1.224167	0	
4	4	-6	-4	1.224167	0	
5	5	0.	0	1.224167	0	
6	6	0.	-4	1.224167	0	
7	7	0.	1	0.916667	0	
8	8	0.	-5	0.916667	0	
9	9	0.	0	0.916667	0	
10	10	0	0	0	0	
11	11	0.	-4	0.916667	0	
12	12	0	-4	0	0	
13	13	5.75	0	1.224167	0	
14	14	5.75	0	1.443333	0	
15	15	5.75	1.75	1.443333	0	
16	16	5.75	-6.25	1.443333	0	
17	17	5.75	-4	1.224167	0	
18	18	5.75	-4	1.443333	0	
19	19	2.75	0	1.224167	0	
20	20	2.75	0	1.443333	0	
21	21	2.75	1.75	1.443333	0	
22	22	2.75	-6.25	1.443333	0	
23	23	2.75	-4	1.224167	0	
24	24	2.75	-4	1.443333	0	
25	25	-5.75	0	1.224167	0	
26	26	-5.75	0	1.443333	0	
27	27	-5.75	1.75	1.443333	0	
28	28	-5.75	-6.25	1.443333	0	
29	29	-5.75	-4	1.224167	0	
30	30	-5.75	-4	1.443333	0	
31	31	-2.75	0	1.224167	0	
32	32	-2.75	0	1.443333	0	
33	33	-2.75	1.75	1.443333	0	
34	34	-2.75	-6.25	1.443333	0	
35	35	-2.75	-4	1.224167	0	

Joint Coordinates and Temperatures (Continued)

	Label	X [ft]	Y [ft]	Z [ft]	Temp [F]	Detach From Diap...
36	36	-2.75	-4	1.443333	0	
37	37	-0.	-2.25	-1.461404	0	
38	38	-2.75	-2.25	1.443333	0	

Joint Boundary Conditions

	Joint Label	X [k/in]	Y [k/in]	Z [k/in]	X Rot.[k-ft/rad]	Y Rot.[k-ft/rad]	Z Rot.[k-ft/rad]
1	10	Reaction	Reaction	Reaction	Reaction	Reaction	Reaction
2	37	Reaction	Reaction	Reaction			
3	12	Reaction	Reaction	Reaction	Reaction	Reaction	Reaction

Member Primary Data

	Label	I Joint	J Joint	K Joint	Rotate(deg)	Section/Shape	Type	Design List	Material	Design Rules
1	1	1	2			MF-H1	Beam	Pipe	A53 Gr.B	Typical
2	2	3	4			MF-H1	Beam	Pipe	A53 Gr.B	Typical
3	3	5	9			RIGID	None	None	RIGID	Typical
4	4	6	11			RIGID	None	None	RIGID	Typical
5	5	7	8			F1-P1	Column	Pipe	A53 Gr.B	Typical
6	6	9	10		90	F1-C1	Beam	RECT	A36 Gr.36	Typical
7	7	11	12		90	F1-C1	Beam	RECT	A36 Gr.36	Typical
8	8	13	14			RIGID	None	None	RIGID	Typical
9	9	15	16			MF-P1	Column	Pipe	A53 Gr.B	Typical
10	10	17	18			RIGID	None	None	RIGID	Typical
11	11	19	20			RIGID	None	None	RIGID	Typical
12	12	21	22			MF-P1	Column	Pipe	A53 Gr.B	Typical
13	13	23	24			RIGID	None	None	RIGID	Typical
14	14	25	26			RIGID	None	None	RIGID	Typical
15	15	27	28			MF-P1	Column	Pipe	A53 Gr.B	Typical
16	16	29	30			RIGID	None	None	RIGID	Typical
17	17	31	32			RIGID	None	None	RIGID	Typical
18	18	33	34			MF-P1	Column	Pipe	A53 Gr.B	Typical
19	19	35	36			RIGID	None	None	RIGID	Typical
20	20	37	38			Tieback	Beam	Pipe	A53 Gr.B	Typical

Hot Rolled Steel Design Parameters

	Label	Shape	Length[ft]	Lbyy[ft]	Lbzz[ft]	Lcomp top[ft]	Lcomp bo...	L-torq...	Kyy	Kzz	Cb	Funct...
1	1	MF-H1	12			Lbyy						Lateral
2	2	MF-H1	12			Lbyy						Lateral
3	5	F1-P1	6			Lbyy						Lateral
4	6	F1-C1	.917			Lbyy						Lateral
5	7	F1-C1	.917			Lbyy						Lateral
6	9	MF-P1	8			Lbyy						Lateral
7	12	MF-P1	8			Lbyy						Lateral
8	15	MF-P1	8			Lbyy						Lateral
9	18	MF-P1	8			Lbyy						Lateral
10	20	Tieback	4			Lbyy						Lateral

Joint Loads and Enforced Displacements (BLC 11 : Live Load a)

	Joint Label	L,D,M	Direction	Magnitude[(k,k-ft), (in,rad), (k*s^2/ft, k*s^2*ft)]
1	29	L	Y	-.5

Joint Loads and Enforced Displacements (BLC 12 : Live Load b)

	Joint Label	L,D,M	Direction	Magnitude[(k,k-ft), (in,rad), (k*s^2/ft, k*s^2*ft)]
1	35	L	Y	-.5

Joint Loads and Enforced Displacements (BLC 13 : Live Load c)

	Joint Label	L,D,M	Direction	Magnitude[(k,k-ft), (in,rad), (k*s^2/ft, k*s^2*ft)]
1	23	L	Y	-.5

Joint Loads and Enforced Displacements (BLC 14 : Live Load d)

	Joint Label	L,D,M	Direction	Magnitude[(k,k-ft), (in,rad), (k*s^2/ft, k*s^2*ft)]
1	17	L	Y	-.5

Member Point Loads (BLC 1 : Dead)

	Member Label	Direction	Magnitude[k,k-ft]	Location[ft,%]
1	12	Y	-.064	%15
2	12	Y	-.064	%65
3	12	Y	-.084	%30
4	12	Y	-.079	%55
5	12	Y	0	0
6	18	Y	-.137	%20
7	18	Y	-.137	%60
8	18	Y	0	0
9	18	Y	0	0
10	18	Y	0	0
11	15	Y	-.052	%5
12	15	Y	-.052	%35
13	15	Y	-.007	%40
14	15	Y	0	0
15	15	Y	0	0
16	5	Y	-.007	%50
17	5	Y	0	0
18	5	Y	0	0
19	5	Y	0	0
20	5	Y	0	0

Member Point Loads (BLC 2 : 0 Wind - No Ice)

	Member Label	Direction	Magnitude[k,k-ft]	Location[ft,%]
1	12	Z	-.325	%15
2	12	Z	-.325	%65
3	12	Z	-.069	%30
4	12	Z	-.095	%55
5	12	Z	0	0
6	18	Z	-.24	%20
7	18	Z	-.24	%60
8	18	Z	0	0
9	18	Z	0	0
10	18	Z	0	0
11	15	Z	-.065	%5
12	15	Z	-.065	%35
13	15	Z	-.042	%40
14	15	Z	0	0
15	15	Z	0	0
16	5	Z	-.042	%50
17	5	Z	0	0
18	5	Z	0	0
19	5	Z	0	0

Member Point Loads (BLC 2 : 0 Wind - No Ice) (Continued)

	Member Label	Direction	Magnitude[k,k-ft]	Location[ft,%]
20	5	Z	0	0

Member Point Loads (BLC 3 : 90 Wind - No Ice)

	Member Label	Direction	Magnitude[k,k-ft]	Location[ft,%]
1	12	X	-.12	%15
2	12	X	-.12	%65
3	12	X	-.042	%30
4	12	X	-.04	%55
5	12	X	0	0
6	18	X	-.111	%20
7	18	X	-.111	%60
8	18	X	0	0
9	18	X	0	0
10	18	X	0	0
11	15	X	-.032	%5
12	15	X	-.032	%35
13	15	X	-.013	%40
14	15	X	0	0
15	15	X	0	0
16	5	X	-.013	%50
17	5	X	0	0
18	5	X	0	0
19	5	X	0	0
20	5	X	0	0

Member Point Loads (BLC 4 : 0 Wind - Ice)

	Member Label	Direction	Magnitude[k,k-ft]	Location[ft,%]
1	12	Z	-.045	%15
2	12	Z	-.045	%65
3	12	Z	-.01	%30
4	12	Z	-.013	%55
5	12	Z	0	0
6	18	Z	-.034	%20
7	18	Z	-.034	%60
8	18	Z	0	0
9	18	Z	0	0
10	18	Z	0	0
11	15	Z	-.009	%5
12	15	Z	-.009	%35
13	15	Z	-.006	%40
14	15	Z	0	0
15	15	Z	0	0
16	5	Z	-.006	%50
17	5	Z	0	0
18	5	Z	0	0
19	5	Z	0	0
20	5	Z	0	0

Member Point Loads (BLC 5 : 90 Wind - Ice)

	Member Label	Direction	Magnitude[k,k-ft]	Location[ft,%]
1	12	X	-.017	%15
2	12	X	-.017	%65
3	12	X	-.006	%30
4	12	X	-.005	%55
5	12	X	0	0

Member Point Loads (BLC 5 : 90 Wind - Ice) (Continued)

	Member Label	Direction	Magnitude[k,k-ft]	Location[ft,%]
6	18	X	-.015	%20
7	18	X	-.015	%60
8	18	X	0	0
9	18	X	0	0
10	18	X	0	0
11	15	X	-.004	%5
12	15	X	-.004	%35
13	15	X	-.002	%40
14	15	X	0	0
15	15	X	0	0
16	5	X	-.002	%50
17	5	X	0	0
18	5	X	0	0
19	5	X	0	0
20	5	X	0	0

Member Point Loads (BLC 6 : 0 Wind - Service)

	Member Label	Direction	Magnitude[k,k-ft]	Location[ft,%]
1	12	Z	-.025	%15
2	12	Z	-.025	%65
3	12	Z	-.005	%30
4	12	Z	-.007	%55
5	12	Z	0	0
6	18	Z	-.019	%20
7	18	Z	-.019	%60
8	18	Z	0	0
9	18	Z	0	0
10	18	Z	0	0
11	15	Z	-.005	%5
12	15	Z	-.005	%35
13	15	Z	-.003	%40
14	15	Z	0	0
15	15	Z	0	0
16	5	Z	-.003	%50
17	5	Z	0	0
18	5	Z	0	0
19	5	Z	0	0
20	5	Z	0	0

Member Point Loads (BLC 7 : 90 Wind - Service)

	Member Label	Direction	Magnitude[k,k-ft]	Location[ft,%]
1	12	X	-.009	%15
2	12	X	-.009	%65
3	12	X	-.003	%30
4	12	X	-.003	%55
5	12	X	0	0
6	18	X	-.009	%20
7	18	X	-.009	%60
8	18	X	0	0
9	18	X	0	0
10	18	X	0	0
11	15	X	-.003	%5
12	15	X	-.003	%35
13	15	X	-.001	%40
14	15	X	0	0
15	15	X	0	0

Member Point Loads (BLC 7 : 90 Wind - Service) (Continued)

	Member Label	Direction	Magnitude[k,k-ft]	Location[ft,%]
16	5	X	-.001	%50
17	5	X	0	0
18	5	X	0	0
19	5	X	0	0
20	5	X	0	0

Member Point Loads (BLC 8 : Ice)

	Member Label	Direction	Magnitude[k,k-ft]	Location[ft,%]
1	12	Y	-.233	%15
2	12	Y	-.233	%65
3	12	Y	-.06	%30
4	12	Y	-.076	%55
5	12	Y	0	0
6	18	Y	-.184	%20
7	18	Y	-.184	%60
8	18	Y	0	0
9	18	Y	0	0
10	18	Y	0	0
11	15	Y	-.051	%5
12	15	Y	-.051	%35
13	15	Y	-.034	%40
14	15	Y	0	0
15	15	Y	0	0
16	5	Y	-.034	%50
17	5	Y	0	0
18	5	Y	0	0
19	5	Y	0	0
20	5	Y	0	0

Member Point Loads (BLC 9 : 0 Seismic)

	Member Label	Direction	Magnitude[k,k-ft]	Location[ft,%]
1	12	Z	-.026	%15
2	12	Z	-.026	%65
3	12	Z	-.017	%30
4	12	Z	-.016	%55
5	12	Z	0	0
6	18	Z	-.055	%20
7	18	Z	-.055	%60
8	18	Z	0	0
9	18	Z	0	0
10	18	Z	0	0
11	15	Z	-.021	%5
12	15	Z	-.021	%35
13	15	Z	-.001	%40
14	15	Z	0	0
15	15	Z	0	0
16	5	Z	-.001	%50
17	5	Z	0	0
18	5	Z	0	0
19	5	Z	0	0
20	5	Z	0	0

Member Point Loads (BLC 10 : 90 Seismic)

	Member Label	Direction	Magnitude[k,k-ft]	Location[ft,%]
1	12	X	-.026	%15

Member Point Loads (BLC 10 : 90 Seismic) (Continued)

	Member Label	Direction	Magnitude[k,k-ft]	Location[ft,%]
2	12	X	-.026	%65
3	12	X	-.017	%30
4	12	X	-.016	%55
5	12	X	0	0
6	18	X	-.055	%20
7	18	X	-.055	%60
8	18	X	0	0
9	18	X	0	0
10	18	X	0	0
11	15	X	-.021	%5
12	15	X	-.021	%35
13	15	X	-.001	%40
14	15	X	0	0
15	15	X	0	0
16	5	X	-.001	%50
17	5	X	0	0
18	5	X	0	0
19	5	X	0	0
20	5	X	0	0

Member Point Loads (BLC 15 : Maint LL 1)

	Member Label	Direction	Magnitude[k,k-ft]	Location[ft,%]
1	1	Y	-.25	%95

Member Point Loads (BLC 16 : Maint LL 2)

	Member Label	Direction	Magnitude[k,k-ft]	Location[ft,%]
1	2	Y	-.25	%5

Member Point Loads (BLC 17 : Maint LL 3)

	Member Label	Direction	Magnitude[k,k-ft]	Location[ft,%]
1	6	Y	-.25	%50

Member Point Loads (BLC 18 : Maint LL 4)

	Member Label	Direction	Magnitude[k,k-ft]	Location[ft,%]
1	7	Y	-.25	%50

Member Distributed Loads (BLC 2 : 0 Wind - No Ice)

	Member Label	Direction	Start Magnitude[k/ft,...	End Magnitude[k/ft,F...	Start Location[ft,%]	End Location[ft,%]
1	1	Z	-.009	-.009	0	0
2	2	Z	-.009	-.009	0	0
3	5	Z	-.008	-.008	0	0
4	6	Z	-.002	-.002	0	0
5	7	Z	-.002	-.002	0	0
6	9	Z	-.007	-.007	0	0
7	12	Z	-.007	-.007	0	0
8	15	Z	-.007	-.007	0	0
9	18	Z	-.007	-.007	0	0
10	20	Z	-.007	-.007	0	0

Member Distributed Loads (BLC 3 : 90 Wind - No Ice)

	Member Label	Direction	Start Magnitude[k/ft,...	End Magnitude[k/ft,F...	Start Location[ft,%]	End Location[ft,%]
1	1	X	-.009	-.009	0	0
2	2	X	-.009	-.009	0	0

Member Distributed Loads (BLC 3 : 90 Wind - No Ice) (Continued)

	Member Label	Direction	Start Magnitude[k/ft,...	End Magnitude[k/ft,F...	Start Location[ft,%]	End Location[ft,%]
3	5	X	-.008	-.008	0	0
4	6	X	-.002	-.002	0	0
5	7	X	-.002	-.002	0	0
6	9	X	-.007	-.007	0	0
7	12	X	-.007	-.007	0	0
8	15	X	-.007	-.007	0	0
9	18	X	-.007	-.007	0	0
10	20	X	-.007	-.007	0	0

Member Distributed Loads (BLC 4 : 0 Wind - Ice)

	Member Label	Direction	Start Magnitude[k/ft,...	End Magnitude[k/ft,F...	Start Location[ft,%]	End Location[ft,%]
1	1	Z	-.001	-.001	0	0
2	2	Z	-.001	-.001	0	0
3	5	Z	-.002	-.002	0	0
4	6	Z	-.003	-.003	0	0
5	7	Z	-.003	-.003	0	0
6	9	Z	-.001	-.001	0	0
7	12	Z	-.001	-.001	0	0
8	15	Z	-.001	-.001	0	0
9	18	Z	-.001	-.001	0	0
10	20	Z	-.001	-.001	0	0

Member Distributed Loads (BLC 5 : 90 Wind - Ice)

	Member Label	Direction	Start Magnitude[k/ft,...	End Magnitude[k/ft,F...	Start Location[ft,%]	End Location[ft,%]
1	1	X	-.001	-.001	0	0
2	2	X	-.001	-.001	0	0
3	5	X	-.002	-.002	0	0
4	6	X	-.003	-.003	0	0
5	7	X	-.003	-.003	0	0
6	9	X	-.001	-.001	0	0
7	12	X	-.001	-.001	0	0
8	15	X	-.001	-.001	0	0
9	18	X	-.001	-.001	0	0
10	20	X	-.001	-.001	0	0

Member Distributed Loads (BLC 6 : 0 Wind - Service)

	Member Label	Direction	Start Magnitude[k/ft,...	End Magnitude[k/ft,F...	Start Location[ft,%]	End Location[ft,%]
1	1	Z	-.0003	-.0003	0	0
2	2	Z	-.0003	-.0003	0	0
3	5	Z	-.0005	-.0005	0	0
4	6	Z	-.0002	-.0002	0	0
5	7	Z	-.0002	-.0002	0	0
6	9	Z	-.0003	-.0003	0	0
7	12	Z	-.0003	-.0003	0	0
8	15	Z	-.0003	-.0003	0	0
9	18	Z	-.0003	-.0003	0	0
10	20	Z	-.0003	-.0003	0	0

Member Distributed Loads (BLC 7 : 90 Wind - Service)

	Member Label	Direction	Start Magnitude[k/ft,...	End Magnitude[k/ft,F...	Start Location[ft,%]	End Location[ft,%]
1	1	X	-.0003	-.0003	0	0
2	2	X	-.0003	-.0003	0	0
3	5	X	-.0005	-.0005	0	0
4	6	X	-.0002	-.0002	0	0
5	7	X	-.0002	-.0002	0	0

Member Distributed Loads (BLC 7 : 90 Wind - Service) (Continued)

	Member Label	Direction	Start Magnitude[k/ft,...	End Magnitude[k/ft,F...	Start Location[ft,%]	End Location[ft,%]
6	9	X	-.0003	-.0003	0	0
7	12	X	-.0003	-.0003	0	0
8	15	X	-.0003	-.0003	0	0
9	18	X	-.0003	-.0003	0	0
10	20	X	-.0003	-.0003	0	0

Member Distributed Loads (BLC 8 : Ice)

	Member Label	Direction	Start Magnitude[k/ft,...	End Magnitude[k/ft,F...	Start Location[ft,%]	End Location[ft,%]
1	1	Y	-.009	-.009	0	0
2	2	Y	-.009	-.009	0	0
3	5	Y	-.013	-.013	0	0
4	6	Y	-.02	-.02	0	0
5	7	Y	-.02	-.02	0	0
6	9	Y	-.008	-.008	0	0
7	12	Y	-.008	-.008	0	0
8	15	Y	-.008	-.008	0	0
9	18	Y	-.008	-.008	0	0
10	20	Y	-.008	-.008	0	0

Member Distributed Loads (BLC 9 : 0 Seismic)

	Member Label	Direction	Start Magnitude[k/ft,...	End Magnitude[k/ft,F...	Start Location[ft,%]	End Location[ft,%]
1	1	Z	-.001	-.001	0	0
2	2	Z	-.001	-.001	0	0
3	5	Z	-.002	-.002	0	0
4	6	Z	-.003	-.003	0	0
5	7	Z	-.003	-.003	0	0
6	9	Z	-.0007	-.0007	0	0
7	12	Z	-.0007	-.0007	0	0
8	15	Z	-.0007	-.0007	0	0
9	18	Z	-.0007	-.0007	0	0
10	20	Z	-.0007	-.0007	0	0

Member Distributed Loads (BLC 10 : 90 Seismic)

	Member Label	Direction	Start Magnitude[k/ft,...	End Magnitude[k/ft,F...	Start Location[ft,%]	End Location[ft,%]
1	1	X	-.001	-.001	0	0
2	2	X	-.001	-.001	0	0
3	5	X	-.002	-.002	0	0
4	6	X	-.003	-.003	0	0
5	7	X	-.003	-.003	0	0
6	9	X	-.0007	-.0007	0	0
7	12	X	-.0007	-.0007	0	0
8	15	X	-.0007	-.0007	0	0
9	18	X	-.0007	-.0007	0	0
10	20	X	-.0007	-.0007	0	0

Basic Load Cases

	BLC Description	Category	X Gravity	Y Gravity	Z Gravity	Joint	Point	Distributed	Area(Me...	Surface(P...
1	Dead	DL		-1			20			
2	0 Wind - No Ice	WLZ					20	10		
3	90 Wind - No Ice	WLX					20	10		
4	0 Wind - Ice	WLZ					20	10		
5	90 Wind - Ice	WLX					20	10		
6	0 Wind - Service	WLZ					20	10		
7	90 Wind - Service	WLX					20	10		

Basic Load Cases (Continued)

	BLC Description	Category	X Gravity	Y Gravity	Z Gravity	Joint	Point	Distributed	Area(Me...	Surface(P...
8	Ice	OL1					20	10		
9	0 Seismic	ELZ					20	10		
10	90 Seismic	ELX					20	10		
11	Live Load a	LL				1				
12	Live Load b	LL				1				
13	Live Load c	LL				1				
14	Live Load d	LL				1				
15	Maint LL 1	LL					1			
16	Maint LL 2	LL					1			
17	Maint LL 3	LL					1			
18	Maint LL 4	LL					1			
19	Maint LL 5	LL								
20	Maint LL 6	LL								
21	Maint LL 7	LL								
22	Maint LL 8	LL								
23	Maint LL 9	LL								
24	Maint LL 10	LL								
25	Maint LL 11	LL								
26	Maint LL 12	LL								
27	Maint LL 13	LL								
28	Maint LL 14	LL								
29	Maint LL 15	LL								

Load Combinations

	Description	Solve	PDelta	SRSS	B...	Fa...	B...	Fa...	B...	Fa...	B...	Fa...	B...	Fa...	B...	Fa...	B...	Fa...	B...	Fa...	B...	Fa...	B...	Fa...
1	1.4 Dead	Yes	Y		1	1.4																		
2	1.2 D + 1.0 - 0 W	Yes	Y		1	1.2	2	1																
3	1.2 D + 1.0 - 30 W	Yes	Y		1	1.2	2	.866	3	.5														
4	1.2 D + 1.0 - 60 W	Yes	Y		1	1.2	3	.866	2	.5														
5	1.2 D + 1.0 - 90 W	Yes	Y		1	1.2	3	1																
6	1.2 D + 1.0 - 120 W	Yes	Y		1	1.2	3	.866	2	-.5														
7	1.2 D + 1.0 - 150 W	Yes	Y		1	1.2	2	-.8...	3	.5														
8	1.2 D + 1.0 - 180 W	Yes	Y		1	1.2	2	-1																
9	1.2 D + 1.0 - 210 W	Yes	Y		1	1.2	2	-.8...	3	-.5														
10	1.2 D + 1.0 - 240 W	Yes	Y		1	1.2	3	-.8...	2	-.5														
11	1.2 D + 1.0 - 270 W	Yes	Y		1	1.2	3	-1																
12	1.2 D + 1.0 - 300 W	Yes	Y		1	1.2	3	-.8...	2	.5														
13	1.2 D + 1.0 - 330 W	Yes	Y		1	1.2	2	.866	3	-.5														
14	1.2 D + 1.0 - 0 W/Ice	Yes	Y		1	1.2	4	1			8	1												
15	1.2 D + 1.0 - 30 W/Ice	Yes	Y		1	1.2	4	.866	5	.5	8	1												
16	1.2 D + 1.0 - 60 W/Ice	Yes	Y		1	1.2	5	.866	4	.5	8	1												
17	1.2 D + 1.0 - 90 W/Ice	Yes	Y		1	1.2	5	1			8	1												
18	1.2 D + 1.0 - 120 W/Ice	Yes	Y		1	1.2	5	.866	4	-.5	8	1												
19	1.2 D + 1.0 - 150 W/Ice	Yes	Y		1	1.2	4	-.8...	5	.5	8	1												
20	1.2 D + 1.0 - 180 W/Ice	Yes	Y		1	1.2	4	-1			8	1												
21	1.2 D + 1.0 - 210 W/Ice	Yes	Y		1	1.2	4	-.8...	5	-.5	8	1												
22	1.2 D + 1.0 - 240 W/Ice	Yes	Y		1	1.2	5	-.8...	4	-.5	8	1												
23	1.2 D + 1.0 - 270 W/Ice	Yes	Y		1	1.2	5	-1			8	1												
24	1.2 D + 1.0 - 300 W/Ice	Yes	Y		1	1.2	5	-.8...	4	.5	8	1												
25	1.2 D + 1.0 - 330 W/Ice	Yes	Y		1	1.2	4	.866	5	-.5	8	1												
26	1.2 D + 1.0 E - 0	Yes	Y		1	1.2	9	1																
27	1.2 D + 1.0 E - 30	Yes	Y		1	1.2	9	.866	10	.5														
28	1.2 D + 1.0 E - 60	Yes	Y		1	1.2	10	.866	9	.5														
29	1.2 D + 1.0 E - 90	Yes	Y		1	1.2	10	1																
30	1.2 D + 1.0 E - 120	Yes	Y		1	1.2	10	.866	9	-.5														

Load Combinations (Continued)

	Description	Solve	PDelta	SRSS	B...	Fa...	B...	Fa...	B...	Fa...	B...	Fa...	B...	Fa...	B...	Fa...	B...	Fa...	B...	Fa...	B...	Fa...	B...	Fa...
31	1.2 D + 1.0 E - 150	Yes	Y		1	1.2	9	-.8...	10	.5														
32	1.2 D + 1.0 E - 180	Yes	Y		1	1.2	9	-1																
33	1.2 D + 1.0 E - 210	Yes	Y		1	1.2	9	-.8...	10	-.5														
34	1.2 D + 1.0 E - 240	Yes	Y		1	1.2	10	-.8...	9	-.5														
35	1.2 D + 1.0 E - 270	Yes	Y		1	1.2	10	-1																
36	1.2 D + 1.0 E - 300	Yes	Y		1	1.2	10	-.8...	9	.5														
37	1.2 D + 1.0 E - 330	Yes	Y		1	1.2	9	.866	10	-.5														
38	1.2 D + 1.5 LL a + Ser...	Yes	Y		1	1.2	6	1			11	1.5												
39	1.2 D + 1.5 LL a + Ser...	Yes	Y		1	1.2	6	.866	7	.5	11	1.5												
40	1.2 D + 1.5 LL a + Ser...	Yes	Y		1	1.2	7	.866	6	.5	11	1.5												
41	1.2 D + 1.5 LL a + Ser...	Yes	Y		1	1.2	7	1			11	1.5												
42	1.2 D + 1.5 LL a + Ser...	Yes	Y		1	1.2	7	.866	6	-.5	11	1.5												
43	1.2 D + 1.5 LL a + Ser...	Yes	Y		1	1.2	6	-.8...	7	.5	11	1.5												
44	1.2 D + 1.5 LL a + Ser...	Yes	Y		1	1.2	6	-1			11	1.5												
45	1.2 D + 1.5 LL a + Ser...	Yes	Y		1	1.2	6	-.8...	7	-.5	11	1.5												
46	1.2 D + 1.5 LL a + Ser...	Yes	Y		1	1.2	7	-.8...	6	-.5	11	1.5												
47	1.2 D + 1.5 LL a + Ser...	Yes	Y		1	1.2	7	-1			11	1.5												
48	1.2 D + 1.5 LL a + Ser...	Yes	Y		1	1.2	7	-.8...	6	.5	11	1.5												
49	1.2 D + 1.5 LL a + Ser...	Yes	Y		1	1.2	6	.866	7	-.5	11	1.5												
50	1.2 D + 1.5 LL b + Ser...	Yes	Y		1	1.2	6	1			12	1.5												
51	1.2 D + 1.5 LL b + Ser...	Yes	Y		1	1.2	6	.866	7	.5	12	1.5												
52	1.2 D + 1.5 LL b + Ser...	Yes	Y		1	1.2	7	.866	6	.5	12	1.5												
53	1.2 D + 1.5 LL b + Ser...	Yes	Y		1	1.2	7	1			12	1.5												
54	1.2 D + 1.5 LL b + Ser...	Yes	Y		1	1.2	7	.866	6	-.5	12	1.5												
55	1.2 D + 1.5 LL b + Ser...	Yes	Y		1	1.2	6	-.8...	7	.5	12	1.5												
56	1.2 D + 1.5 LL b + Ser...	Yes	Y		1	1.2	6	-1			12	1.5												
57	1.2 D + 1.5 LL b + Ser...	Yes	Y		1	1.2	6	-.8...	7	-.5	12	1.5												
58	1.2 D + 1.5 LL b + Ser...	Yes	Y		1	1.2	7	-.8...	6	-.5	12	1.5												
59	1.2 D + 1.5 LL b + Ser...	Yes	Y		1	1.2	7	-1			12	1.5												
60	1.2 D + 1.5 LL b + Ser...	Yes	Y		1	1.2	7	-.8...	6	.5	12	1.5												
61	1.2 D + 1.5 LL b + Ser...	Yes	Y		1	1.2	6	.866	7	-.5	12	1.5												
62	1.2 D + 1.5 LL c + Ser...	Yes	Y		1	1.2	6	1			13	1.5												
63	1.2 D + 1.5 LL c + Ser...	Yes	Y		1	1.2	6	.866	7	.5	13	1.5												
64	1.2 D + 1.5 LL c + Ser...	Yes	Y		1	1.2	7	.866	6	.5	13	1.5												
65	1.2 D + 1.5 LL c + Ser...	Yes	Y		1	1.2	7	1			13	1.5												
66	1.2 D + 1.5 LL c + Ser...	Yes	Y		1	1.2	7	.866	6	-.5	13	1.5												
67	1.2 D + 1.5 LL c + Ser...	Yes	Y		1	1.2	6	-.8...	7	.5	13	1.5												
68	1.2 D + 1.5 LL c + Ser...	Yes	Y		1	1.2	6	-1			13	1.5												
69	1.2 D + 1.5 LL c + Ser...	Yes	Y		1	1.2	6	-.8...	7	-.5	13	1.5												
70	1.2 D + 1.5 LL c + Ser...	Yes	Y		1	1.2	7	-.8...	6	-.5	13	1.5												
71	1.2 D + 1.5 LL c + Ser...	Yes	Y		1	1.2	7	-1			13	1.5												
72	1.2 D + 1.5 LL c + Ser...	Yes	Y		1	1.2	7	-.8...	6	.5	13	1.5												
73	1.2 D + 1.5 LL c + Ser...	Yes	Y		1	1.2	6	.866	7	-.5	13	1.5												
74	1.2 D + 1.5 LL d + Ser...	Yes	Y		1	1.2	6	1			14	1.5												
75	1.2 D + 1.5 LL d + Ser...	Yes	Y		1	1.2	6	.866	7	.5	14	1.5												
76	1.2 D + 1.5 LL d + Ser...	Yes	Y		1	1.2	7	.866	6	.5	14	1.5												
77	1.2 D + 1.5 LL d + Ser...	Yes	Y		1	1.2	7	1			14	1.5												
78	1.2 D + 1.5 LL d + Ser...	Yes	Y		1	1.2	7	.866	6	-.5	14	1.5												
79	1.2 D + 1.5 LL d + Ser...	Yes	Y		1	1.2	6	-.8...	7	.5	14	1.5												
80	1.2 D + 1.5 LL d + Ser...	Yes	Y		1	1.2	6	-1			14	1.5												
81	1.2 D + 1.5 LL d + Ser...	Yes	Y		1	1.2	6	-.8...	7	-.5	14	1.5												
82	1.2 D + 1.5 LL d + Ser...	Yes	Y		1	1.2	7	-.8...	6	-.5	14	1.5												
83	1.2 D + 1.5 LL d + Ser...	Yes	Y		1	1.2	7	-1			14	1.5												
84	1.2 D + 1.5 LL d + Ser...	Yes	Y		1	1.2	7	-.8...	6	.5	14	1.5												
85	1.2 D + 1.5 LL d + Ser...	Yes	Y		1	1.2	6	.866	7	-.5	14	1.5												
86	1.2 D + 1.5 LL Maint (1)	Yes	Y		1	1.2					15	1.5												
87	1.2 D + 1.5 LL Maint (2)	Yes	Y		1	1.2					16	1.5												

Load Combinations (Continued)

	Description	Solve	PDelta	SRSS	B...	Fa...	B...	Fa...	B...	Fa...	B...	Fa...	B...	Fa...	B...	Fa...	B...	Fa...	B...	Fa...	B...	Fa...	B...	Fa...
88	1.2 D + 1.5 LL Maint (3)	Yes	Y		1	1.2					17	1.5												
89	1.2 D + 1.5 LL Maint (4)	Yes	Y		1	1.2					18	1.5												
90	1.2 D + 1.5 LL Maint (5)	Yes	Y		1	1.2					19	1.5												
91	1.2 D + 1.5 LL Maint (6)	Yes	Y		1	1.2					20	1.5												
92	1.2 D + 1.5 LL Maint (7)	Yes	Y		1	1.2					21	1.5												
93	1.2 D + 1.5 LL Maint (8)	Yes	Y		1	1.2					22	1.5												
94	1.2 D + 1.5 LL Maint (9)	Yes	Y		1	1.2					23	1.5												
95	1.2 D + 1.5 LL Maint (...	Yes	Y		1	1.2					24	1.5												
96	1.2 D + 1.5 LL Maint (...	Yes	Y		1	1.2					25	1.5												
97	1.2 D + 1.5 LL Maint (...	Yes	Y		1	1.2					26	1.5												
98	1.2 D + 1.5 LL Maint (...	Yes	Y		1	1.2					27	1.5												
99	1.2 D + 1.5 LL Maint (...	Yes	Y		1	1.2					28	1.5												
100	1.2 D + 1.5 LL Maint (...	Yes	Y		1	1.2					29	1.5												

Envelope Joint Reactions

	Joint		X [k]	LC	Y [k]	LC	Z [k]	LC	MX [k-ft]	LC	MY [k-ft]	LC	MZ [k-ft]	LC
1	10	max	1.29	40	1.486	14	.623	2	-.279	8	1.338	42	.013	80
2		min	-.942	82	.602	8	-1.159	8	-.684	14	-.966	84	-.018	38
3	37	max	.743	8	.025	20	.777	2	0	100	0	100	0	100
4		min	-.725	2	.006	2	-.8	8	0	1	0	1	0	1
5	12	max	.924	76	1.477	20	.735	14	-.279	2	.973	79	.013	74
6		min	-1.302	46	.603	2	-.072	8	-.684	20	-1.3	49	-.019	44
7	Totals:	max	1.156	5	2.986	25	2.031	2						
8		min	-1.156	11	1.228	8	-2.031	8						

Envelope AISC 15th(360-16): LRFD Steel Code Checks

	Member	Shape	Code Check	Loc[...	LC	Shea...	Loc[ft]	Dir	LC	phi*Pn...	phi*Pnt...	phi*Mn...	phi*Mn...	Cb	Eqn
1	1	PIPE_2.5	.495	6	2	.124	6		8	15.797	50.715	3.596	3.596	1...	H1-1b
2	2	PIPE_2.5	.449	6	8	.078	8.75		8	15.797	50.715	3.596	3.596	1...	H1-1b
3	5	PIPE_4.0	.113	1	43	.031	1		42	83.098	93.24	10.631	10.631	1...	H1-1b
4	6	PL1/2"x8"	.527	.917	18	.042	.917	y	40	95.459	129.6	1.35	21.6	1...	H1-1b
5	7	PL1/2"x8"	.527	.917	24	.043	.917	y	45	95.459	129.6	1.35	21.6	1...	H1-1b
6	9	PIPE_2.0	.379	1.75	83	.053	5.75		74	14.916	32.13	1.872	1.872	2...	H1-1b
7	12	PIPE_2.0	.481	5.75	77	.057	5.75		75	14.916	32.13	1.872	1.872	2...	H1-1b
8	15	PIPE_2.0	.438	1.75	41	.061	5.75		38	14.916	32.13	1.872	1.872	2...	H1-1b
9	18	PIPE_2.0	.563	5.75	44	.121	4		8	14.916	32.13	1.872	1.872	2...	H1-1b
10	20	PIPE_2.0	.040	0	2	.003	4		22	26.521	32.13	1.872	1.872	1...	H1-1b*